YOUR REF: CA 880/2015 (803310)
OUR REF: 1794/L02

31 March 2017

DOUGLAS SHIRE COUNCIL
Received
File Name CA880/2015
Document No
31 MAR 2017
Attention NRB orig ✓
Information

Attention: Planning Department

Douglas Shire Council
PO Box 723
Mossman QLD 4873

Dear Sir/Madam

RE : Operation Works Application - Port Douglas Reservoir –Crees Road Craiglie

With reference to your letter dated 31st January 2017, Douglas Shire Council – Infrastructure Department would request Operational Works approval in accordance with the above decision notice.

In reference to the specific Assessment Manager Conditions imposed we note the following:

Condition	Condition	Response
A.1	Carry out approved development in accordance with approved drawings	Development will be carried out in accordance with newly submitted plans. New plans design intent remains, however plans have been amended for operational improvements and to update design elements to reflect the DA conditions. Refer attached updated plans
A.2.	Reconfiguration of Lot must be completed prior to reservoir commissioning	Conditions relating to the creation of the Lot have been completed, refer below. Conditions relating to construction activities are anticipated being completed by January 2018.
A.3.	Proposed Lot plan	Refer attached survey plan. • New Lot 801 is development site, with Lot 800 the remaining parcel. • Agreement between the referenced parties was undertaken in the creation of the new Lot 801
A.4.	Undertake external works	Refer Empower drawing B00217-CR001 to CR004 • Rural road to FNQROC standard is detailed • Rural access to Lot 800 incorporated • At connection of existing formed road and proposed road, alignment has been corrected to be consistent with engineering standards. Rural access to Lot 15/SP113652 and Lot 144/SP113652 have also been incorporated
A.5.	Drainage Study	Not required
A.6.	Cane Railway Crossing	Consultation with Mackay Sugar the owner of

		the cane rail has occurred and the construction of the crossing is in accordance with their requirements. Note to reduce operational impacts during cane harvesting season, DSC commissioned Mackay Sugar to construct the rail crossing, refer attached photo
A.7.	Lawful Point of Discharge	Refer to Drawing CR001. • Road stormwater now discharges via road table drains within the road reserve, finally discharging into Crees Creek. • Lot stormwater is directed from buildings and pavements and will exit Lot as sheet flow in accordance with existing conditons
A.8	Sediment & Erosion Control	As condition A.5 is now not required, the sediment and erosion control plans are unchanged from the development application.
B.1.	Carry out approved development in accordance with approved drawings	Refer to condition A.1. response
B.2.	Reconfiguration of Lot must be completed prior to reservoir commissioning	Refer to condition A.2. response
B.3.	Amended plans	Refer to condition A.1. response
B.4.	External works	Refer to condition A.4. response
B.5.	Drainage Study	Not required
B.6.	Cane Railway Crossing	Refer to condition A.6. response
B.7.	Lawful Point of Discharge	Refer to condition A.7. response
B.8.	Sediment & Erosion Control	Refer to condition A.8. response
B.9	Batter Treatment	Not required
B.10.	Transportation of fill/spoil	Compliance with this condition will be contractually enforced with the civil contractor commissioned to undertake the work.
B.11	Dust	Compliance with this condition will be contractually enforced with the civil contractor commissioned to undertake the work.
B.12.	Landscaping Plan	Refer attached plan • Plantings have been located on northern and eastern faces of reservoir to provide screening • Plant species have been selected as appropriate from the area and will be supplied from Council's nursery.
B.13.	Vegetation clearing	Only vegetation clearing required to construct the development has been scheduled for the Contractor. In addition compliance with this condition will be contractually enforced with the civil contractor commissioned to undertake the work.
B.14.	Building Colours	Roof sheeting colour will be Colorbond Surfmist, External tank walls will be concrete. Chlorination building will be Colorbond Pale Eucalypt
B.15.	Wildlife	Compliance with this condition will be contractually enforced with the civil contractor

		commissioned to undertake the work
B.16	Removal of Protected Vegetation	Not required
B.17.	Notification of Vegetation Clearing	Compliance with this condition will be contractually enforced with the civil contractor commissioned to undertake the work

A full set of civil and structural drawings are provided to assist in assessment. Additional information such as geotechnical investigation reports is available upon request.

Should you have any queries, please do not hesitate to contact the undersigned.

Yours faithfully

Scott Hahne
Project Engineer
Douglas Shire Council

DOUGLAS SHIRE COUNCIL

PORT DOUGLAS WATER STORAGE AND TRUNK WATER SUPPLY

DEVELOPMENT SUMMARY

NAME: PORT DOUGLAS WATER STORAGE AND TRUNK WATER SUPPLY INFRASTRUCTURE
LOCATION: PORT DOUGLAS

NAME OF AUTHORITY

DOUGLAS SHIRE COUNCIL

PROPERTY DESCRIPTION

LOT 801 ON SP279536

SURVEY ORIGIN

PSM	156708
RL	7 358
DATUM	AHD
SURVEYOR	CHARLES O'NEILL

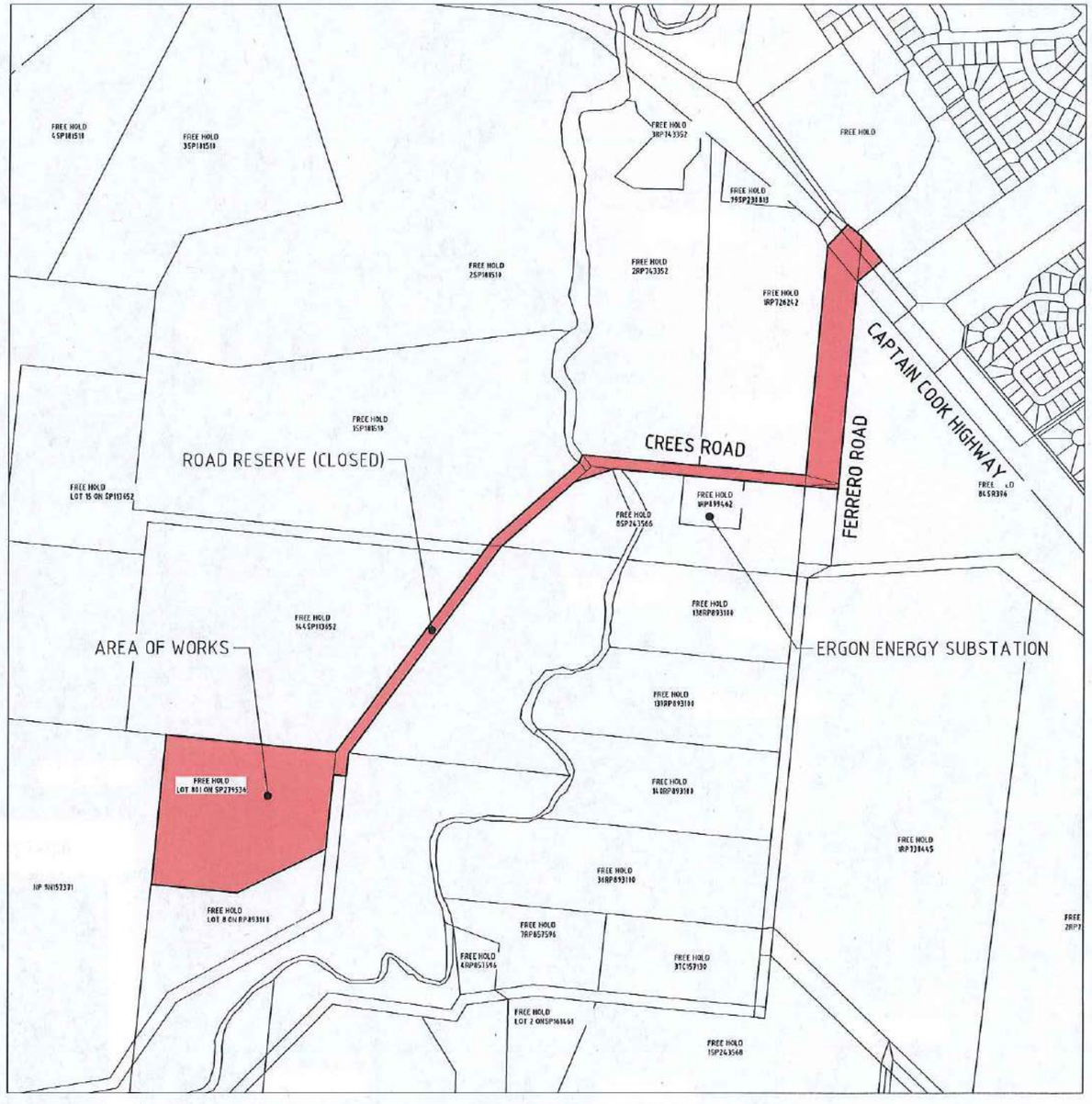

LOCALITY PLAN
NOT TO SCALE

DRAWING LIST

DRAWING NUMBER	REVISION	DRAWING TITLE
GENERAL ARRANGEMENT		
B00217-CG001	A	FACE
B00217-CG002	A	RESERVOIR SITE WITH AERIAL PHOTO
B00217-CG003	A	LAND ACQUISITION PLAN
B00217-CG004	A	CONSTRAINTS MAP
ROADWORKS AND DRAINAGE		
B00217-CR001	A	ROADWORKS AND DRAINAGE PLAN
B00217-CR002	A	ACCESS ROAD LONGITUDINAL SECTION
B00217-CR003	A	ACCESS ROAD CROSS SECTIONS (SHEET 1 OF 2)
B00217-CR004	A	ACCESS ROAD CROSS SECTIONS (SHEET 2 OF 2)
B00217-CR005	A	ROADWORKS SIGNS
B00217-CR006	A	STORMWATER LONGITUDINAL SECTIONS
RESERVOIR SITE		
B00217-CE001	A	RESERVOIR LAYOUT
B00217-CE002	A	RESERVOIR SITE EARTHWORKS
B00217-CE003	A	RESERVOIR CONCRETE JOINTING
B00217-CE004	A	RESERVOIR SITE FENCING
TRUNK WATER MAINS		
B00217-CW001	A	TRUNK WATER MAIN NOTES SCHEDULES AND LOCALITY PLAN
B00217-CW002	A	TRUNK MAIN LONGITUDINAL SECTION (SHEET 1 OF 7)
B00217-CW003	A	TRUNK MAIN LONGITUDINAL SECTION (SHEET 2 OF 7)
B00217-CW004	A	TRUNK MAIN LONGITUDINAL SECTION (SHEET 3 OF 7)
B00217-CW005	A	TRUNK MAIN LONGITUDINAL SECTION (SHEET 4 OF 7)
B00217-CW006	A	TRUNK MAIN LONGITUDINAL SECTION (SHEET 5 OF 7)
B00217-CW007	A	TRUNK MAIN LONGITUDINAL SECTION (SHEET 6 OF 7)
B00217-CW008	A	TRUNK MAIN LONGITUDINAL SECTION (SHEET 7 OF 7)
MISCELLANEOUS DETAILS		
B00217-CM003	A	WATER MAIN DETAILS (SHEET 1 OF 4)
B00217-CM004	A	WATER MAIN DETAILS (SHEET 2 OF 4)
B00217-CM005	A	WATER MAIN DETAILS (SHEET 3 OF 4)
B00217-CM006	A	WATER MAIN DETAILS (SHEET 4 OF 4)
B00217-CM007	A	THRUST BLOCK DETAILS - 20ML RESERVOIR LINES
B00217-CM008	A	THRUST BLOCK DETAILS - FUTURE RESERVOIR LINES
EROSION AND SEDIMENT CONTROL		
B00217-CV001	A	CONSTRUCTION PHASE
B00217-CV002	A	OPERATIONAL PHASE
B00217-CV003	A	DETAIL

DOUGLAS SHIRE COUNCIL

Empower
ENGINEERS & PROJECT MANAGERS
ABN 23 010 743 692

Datum
AHD
PSM 156708
RL 7358
(MGA) COORD

FOR TENDER

Project No.	Drawing No.	Rev
	B00217-CG001	A

ARTISTS IMPRESSION - AERIAL VIEW OF RESERVOIR

ARTISTS IMPRESSION - VIEW FROM THE CAPTAIN HOOK HIGHWAY

0 50 100 150 200 250m
50 37.5 25 12.5
SCALE 1:2500 (A1) 1:5000(A3)
DO NOT SCALE USE ONLY THE DIMENSIONS PROVIDED.

No.	Amendments	Drawn	Design	Appd	Registered Engineer	Reg No.	Date
A	ISSUED FOR TENDER WITH DOUGLAS SHIRE COUNCIL AMENDMENTS	ESS					05/12/16

This drawing cannot be copied or reproduced in any form or used for any purpose other than that originally intended without the written permission of Empower Engineers and Project Managers © COPYRIGHT 2017

DOUGLAS SHIRE COUNCIL

Empower ENGINEERS & PROJECT MANAGERS ABN 23 010 743 692

Client: DOUGLAS SHIRE COUNCIL

Project: PORT DOUGLAS WATER STORAGE AND TRUNK WATER SUPPLY

Title: RESERVOIR SITE WITH AERIAL PHOTO

Datum: AHD PSM 158708 RL 7358 (MGA) COORD

FOR TENDER

Project No. B00217 Drawing No. CG002 Rev A

User: CHRIS HENSCH File Name: B:\Brisbane - Consulting\B00217 Port Douglas Reservoir\4 Civil_DWG\14-2 CURRENT\Preliminary Design\TN\01A-AERIAL PHOTO
Plot Date: 21/12/2017 9:02:16 AM

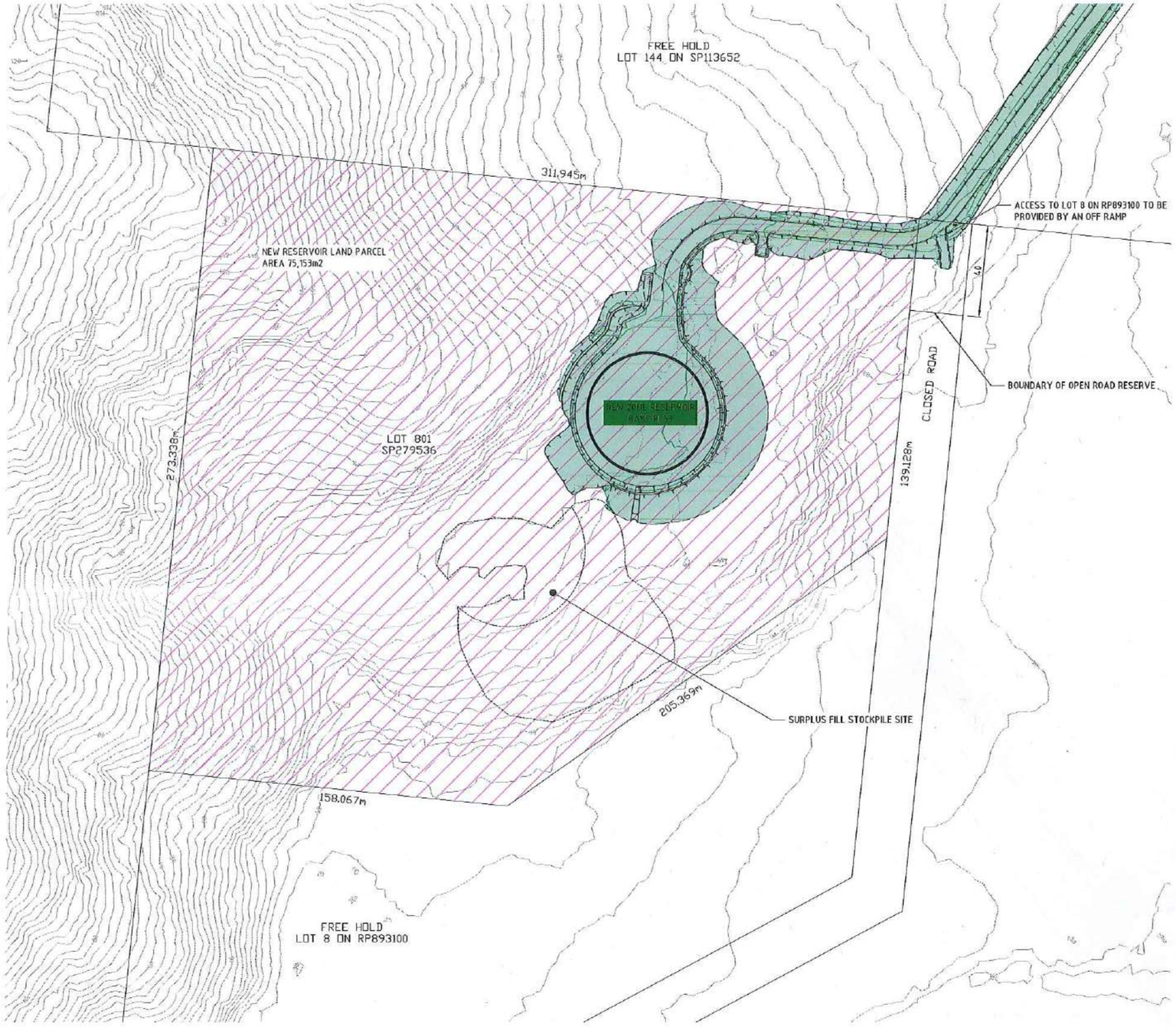

NEW RESERVOIR SITE - LAND PARCEL DIMENSIONS

RESUMPTION BY DOUGLAS SHIRE COUNCIL
SCALE: 1:1000

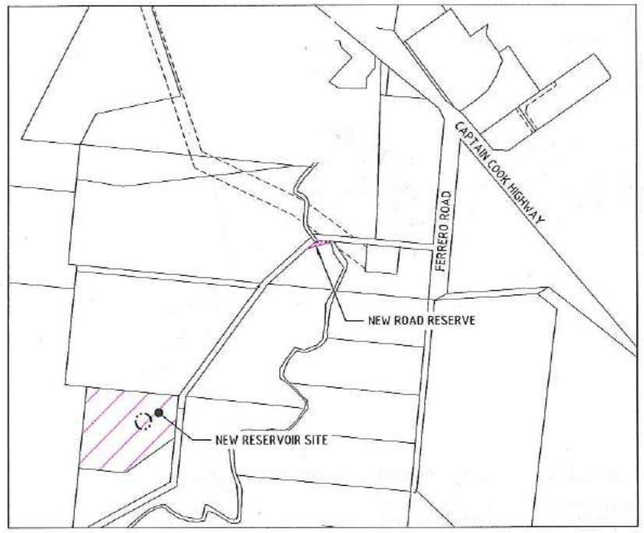

LAND PARCEL LOCATIONS

NTS

LEGEND

EXTENT OF EARTHWORKS

RESERVOIR

BOTTOM OF BATTER

TOP OF BATTER

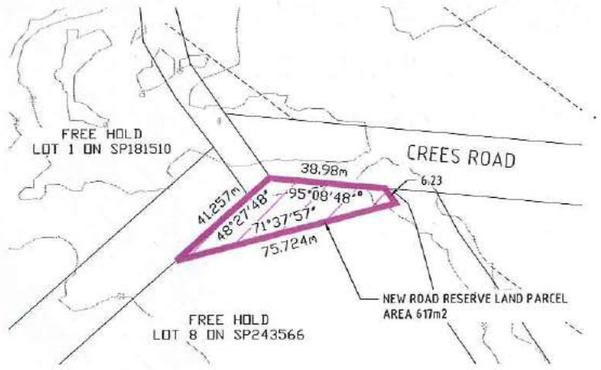

NEW ROAD RESERVE - LAND PARCEL DIMENSIONS

RESUMPTION BY DOUGLAS SHIRE COUNCIL
SCALE: 1:1000

0 20 40 60 80 100m
20 15 10 5

SCALE 1:1000 (A1) 1:2000 (A3)
DO NOT SCALE USE ONLY THE DIMENSIONS PROVIDED

No.	Amendments	Drawn	Design	Appd	Registered Engineer	Reg No.	Date
A	ISSUED FOR TENDER WITH DOUGLAS SHIRE COUNCIL AMENDMENTS	ESS					05/12/16

This drawing cannot be copied or reproduced in any form or used for any purpose other than that originally intended without the written permission of Empower Engineers and Project Managers © COPYRIGHT 2017

DOUGLAS SHIRE COUNCIL

Empower ENGINEERS & PROJECT MANAGERS ABN 23 010 743 692

Client: DOUGLAS SHIRE COUNCIL

Project: PORT DOUGLAS WATER STORAGE AND TRUNK WATER SUPPLY

Title: LAND ACQUISITION PLAN

Datum: AHD PSM 156708 RL 7358 (MGA) COORD

FOR TENDER

Project No: B00217-CG003 | Drawing No. | Rev: A

MAP DISCLAIMER

- GOOGLE EARTH QUEENSLAND GLOBE REGIONAL ECOSYSTEM MAPPING, IMAGERY DATE: (8/4/2016).
- REGIONAL ECOSYSTEM LINE WORK SHOULD BE USED AS A GUIDE ONLY.
- WHILE EVERY CARE IS TAKEN TO ENSURE THE ACCURACY OF THE LINE WORK THERE ARE NO REPRESENTATIONS OR WARRANTIES ABOUT ITS ACCURACY, RELIABILITY, COMPLETENESS OR SUITABILITY FOR ANY PARTICULAR PURPOSE AND ALL RESPONSIBILITY AND ALL LIABILITY (INCLUDING WITHOUT LIMITATION, LIABILITY IN NEGLIGENCE) FOR ALL EXPENSES, LOSSES, DAMAGES (INCLUDING INDIRECT OR CONSEQUENTIAL DAMAGE) AND COSTS WHICH MIGHT INCUR AS A RESULT OF THE LINE WORK BEING INACCURATE OR INCOMPLETE IN ANY WAY AND FOR ANY REASON RESTS WITH THE CONTRACTOR.

DIGITAL CADASTRAL DATA BASE - BOUNDARY INFORMATION

- BASED ON OR CONTAINS DATA PROVIDED BY THE STATE OF QUEENSLAND (DEPARTMENT OF ENVIRONMENT AND RESOURCE MANAGEMENT).
- IN CONSIDERATION OF THE STATE PERMITTING USE OF THIS DATA YOU ACKNOWLEDGE AND AGREE THAT THE STATE GIVES NO WARRANTY IN RELATION TO THE DATA (INCLUDING ACCURACY, RELIABILITY, COMPLETENESS, CURRENCY OR SUITABILITY) AND ACCEPTS NO LIABILITY (INCLUDING WITHOUT LIMITATION, LIABILITY IN NEGLIGENCE) FOR ANY LOSS, DAMAGE OR COSTS (INCLUDING CONSEQUENTIAL DAMAGE) RELATING TO ANY USE OF THE DATA. DATA MUST NOT BE USED FOR DIRECT MARKETING OR BE USED IN BREACH OF THE PRIVACY LAWS.
- THE AERIAL PHOTOGRAPHY USED IN THIS PLAN HAS NOT BEEN RECTIFIED. THE IMAGE HAS BEEN OVERLAID AS A BEST FIT ON THE BOUNDARIES SHOWN AND POSITION IS APPROXIMATE ONLY.
- DATE OF CAPTURE: AUGUST 2008.

LEGEND

- EXISTING TREES
- REMNANT VEGETATION CONTAINING OF CONCERN - DOMINATE REGIONAL ECOSYSTEMS
- REMNANT VEGETATION CONTAINING NO CONCERN AT PRESENT REGIONAL ECOSYSTEM
- VEGETATION MANAGEMENT ACT ESSENTIAL HABITAT
- 450Ø INLET MAIN
- 600Ø OUTLET MAIN

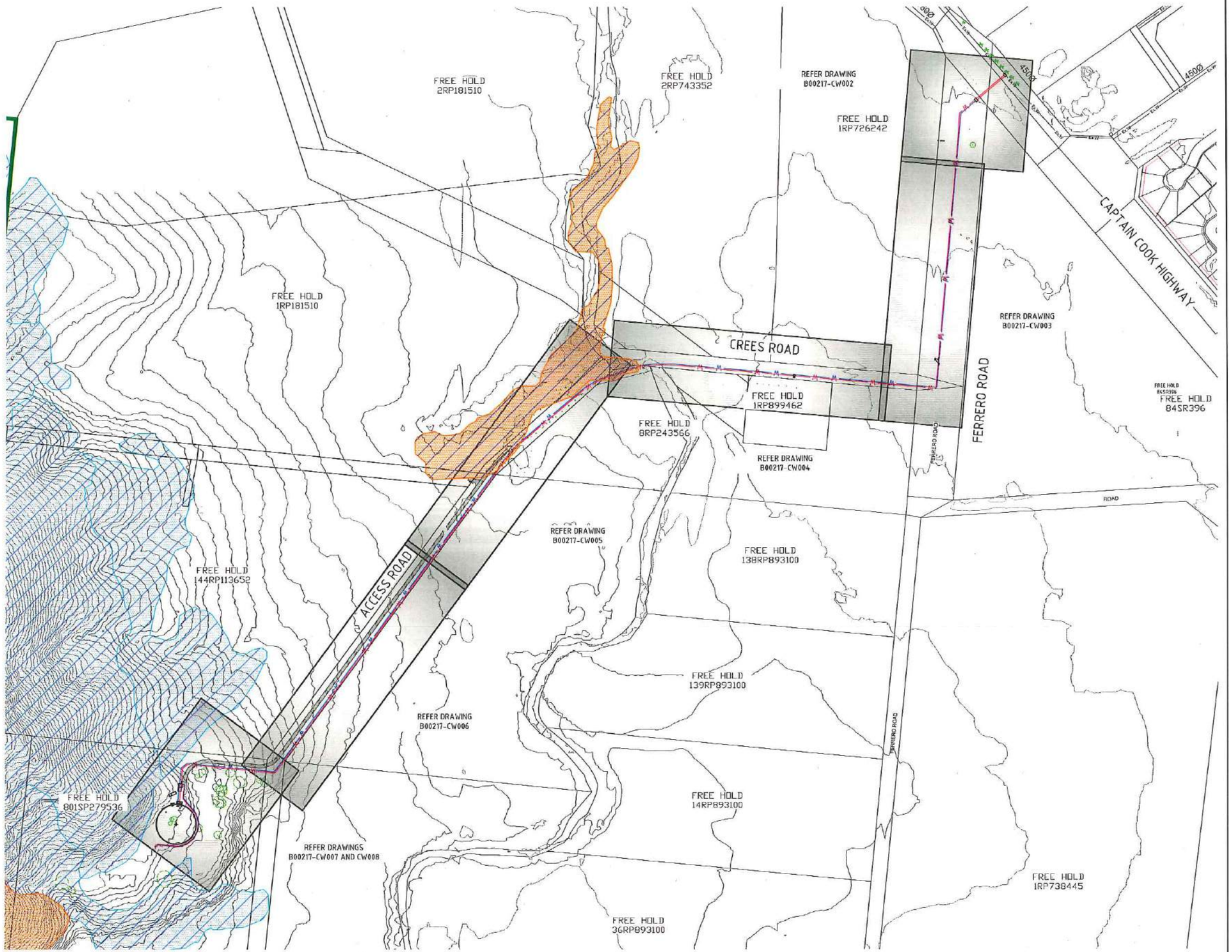

0 50 100 150 200 250m
SI 37.5 25 12.5
SCALE 1:2500 (A1) 1:5000(A3)
DO NOT SCALE USE ONLY THE DIMENSIONS PROVIDED.

No	Amendments	Drawn	Design	Appd	Registered Engineer	Reg No.	Date
A	ISSUED FOR TENDER WITH DOUGLAS SHIRE COUNCIL AMENDMENTS	ESS					05/12/16

This drawing cannot be copied or reproduced in any form or used for any purpose other than that originally intended without the written permission of Empower Engineers and Project Managers © COPYRIGHT 2017

DOUGLAS SHIRE COUNCIL

Empower ENGINEERS & PROJECT MANAGERS ABN 23 010 743 692

Client: DOUGLAS SHIRE COUNCIL

Project: PORT DOUGLAS WATER STORAGE AND TRUNK WATER SUPPLY

Title: CONSTRAINT MAP

Datum: AHD PSM 156708 RL 7358 (MGA) COORD

FOR TENDER

Project No. / Drawing No.: B00217-CG004

Rev: A

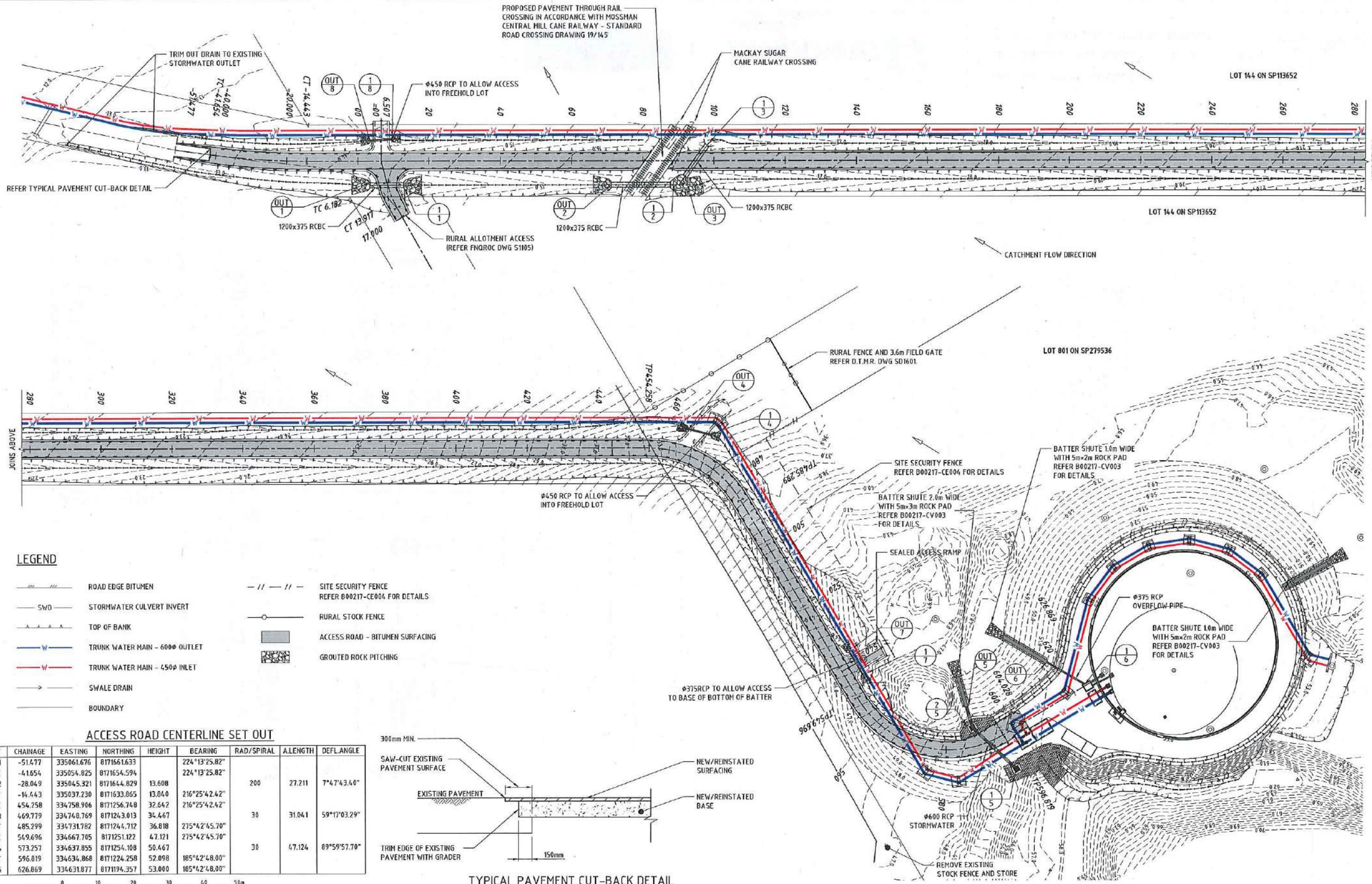

LEGEND

- ROAD EDGE BITUMEN
- STORMWATER CULVERT INVERT
- TOP OF BANK
- TRUNK WATER MAIN - 600Φ OUTLET
- TRUNK WATER MAIN - 450Φ INLET
- SWALE DRAIN
- BOUNDARY
- SITE SECURITY FENCE REFER B00217-CE004 FOR DETAILS
- RURAL STOCK FENCE
- ACCESS ROAD - BITUMEN SURFACING
- GROUTED ROCK PITCHING

ACCESS ROAD CENTERLINE SET OUT

PT	CHAINAGE	EASTING	NORTHING	HEIGHT	BEARING	RAD/SPIRAL	A.LENGTH	DEFL.ANGLE
IP1	-51.477	335061.676	8171661.633		224°13'25.82"			
TC	-41.654	335054.825	8171654.594		224°13'25.82"			
IP2	-28.049	335045.321	8171644.829	13.608		200	27.211	7°47'43.40"
CT	-14.443	335037.230	8171633.865	13.840	216°25'42.42"			
TC	454.258	334758.906	8171256.748	32.642	216°25'42.42"			
IP3	469.779	334748.769	8171243.013	34.467		30	31.041	59°17'03.29"
CT	485.299	334731.782	8171244.712	36.818	275°42'45.70"			
TC	549.696	334667.705	8171251.122	47.121	275°42'45.70"			
IP4	573.257	334637.855	8171254.108	50.467		30	47.124	89°59'57.70"
CT	596.819	334634.868	8171224.258	52.098	185°42'48.00"			
IP5	626.869	334631.877	8171194.357	53.000	185°42'48.00"			

TYPICAL PAVEMENT CUT-BACK DETAIL
SCALE 1:20

0 10 20 30 40 50m
10 7.5 5 2.5
SCALE 1:500 (A1) 1:1000 (A3)
DO NOT SCALE USE ONLY THE DIMENSIONS PROVIDED.

No.	Amendments	Drawn	Design	Appd	Registered Engineer	Reg No.	Date
A	ISSUED FOR TENDER WITH DOUGLAS SHIRE COUNCIL AMENDMENTS	ESS					05/12/16

This drawing cannot be copied or reproduced in any form or used for any purpose other than that originally intended without the written permission of Empower Engineers and Project Managers © COPYRIGHT 2017

DOUGLAS SHIRE COUNCIL

Empower ENGINEERS & PROJECT MANAGERS ABN 23 010 743 692

Client: DOUGLAS SHIRE COUNCIL

Project: PORT DOUGLAS WATER STORAGE AND TRUNK WATER SUPPLY

Title: ROADWORKS AND DRAINAGE PLAN

Datum: AHD PSM 156708 RL 7358 (MGA) COORD

FOR TENDER

Project No. / Drawing No.: B00217-CR001

Rev: A

User: CHRIS WOBSON File Name: B:\Brisbane - Consulting\JOBS\B00217\B00217 Port Douglas Reservoir\4-CIVIL-DRGS\4.2 CURRENT\Preliminary Design\T00101-RoX Plot Date: 27/02/2017 9:47:11 AM

PROVISIONAL PAVEMENT DESIGN

WEARING COURSE	PRIMER, 2-COAT SEAL (16mm/10mm)
BASE COURSE	150mm (TYPE 2.3 MODIFIED WITH 1% CEMENT)

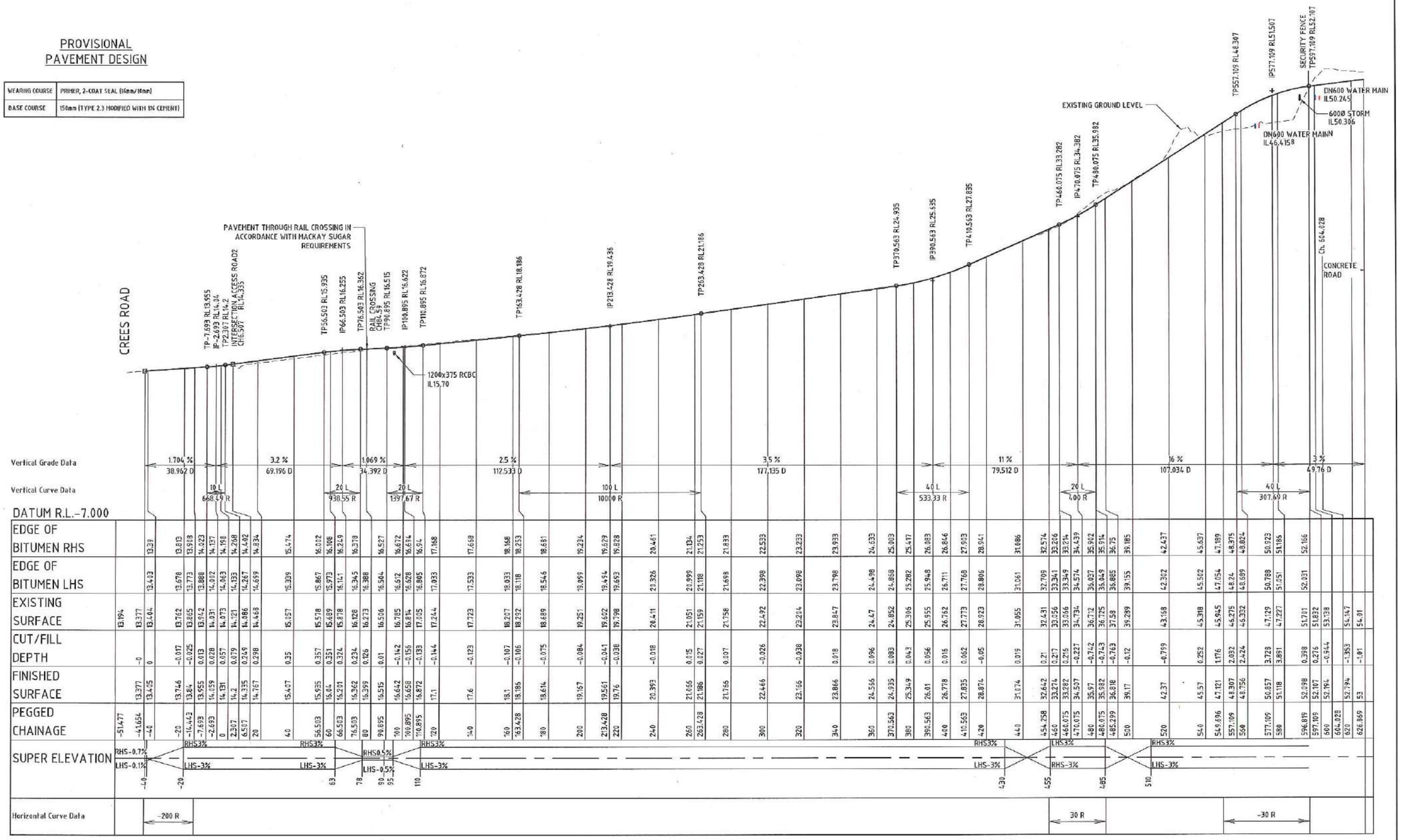

ACCESS ROAD LONGITUDINAL SECTION

HORIZONTAL 1:1000 VERTICAL 1:250

SCALE 1:250 (A1) 1:500 (A3)
DO NOT SCALE USE ONLY THE DIMENSIONS PROVIDED

SCALE 1:1000 (A1) 1:2000 (A3)
DO NOT SCALE USE ONLY THE DIMENSIONS PROVIDED.

No.	Amendments	Drawn	Design	Appd	Registered Engineer	Reg No.	Date
A	ISSUED FOR TENDER WITH DOUGLAS SHIRE COUNCIL AMENDMENTS	ESS					05/12/16

This drawing cannot be copied or reproduced in any form or used for any purpose other than that originally intended without the written permission of Empower Engineers and Project Managers © COPYRIGHT 2017

DOUGLAS SHIRE COUNCIL

Empower ENGINEERS & PROJECT MANAGERS ABN 23 010 743 692

Client: DOUGLAS SHIRE COUNCIL

Project: PORT DOUGLAS WATER STORAGE AND TRUNK WATER SUPPLY

Title: ACCESS ROAD LONGITUDINAL SECTION

Datum: AHD PSM 156708 RL 7358 (MGA) COORD

FOR TENDER

Project No. B00217-CR002 | Drawing No. | Rev A

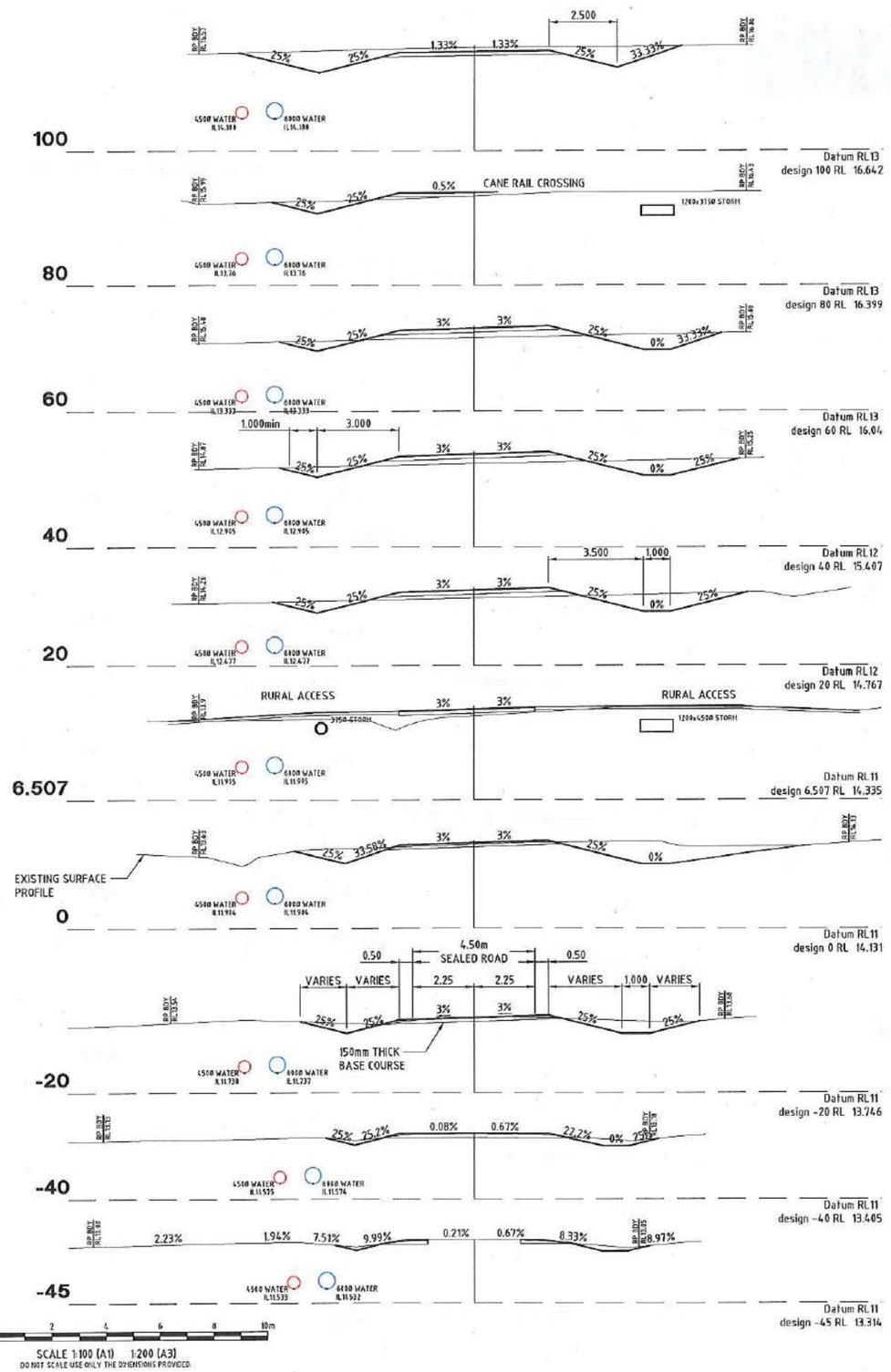

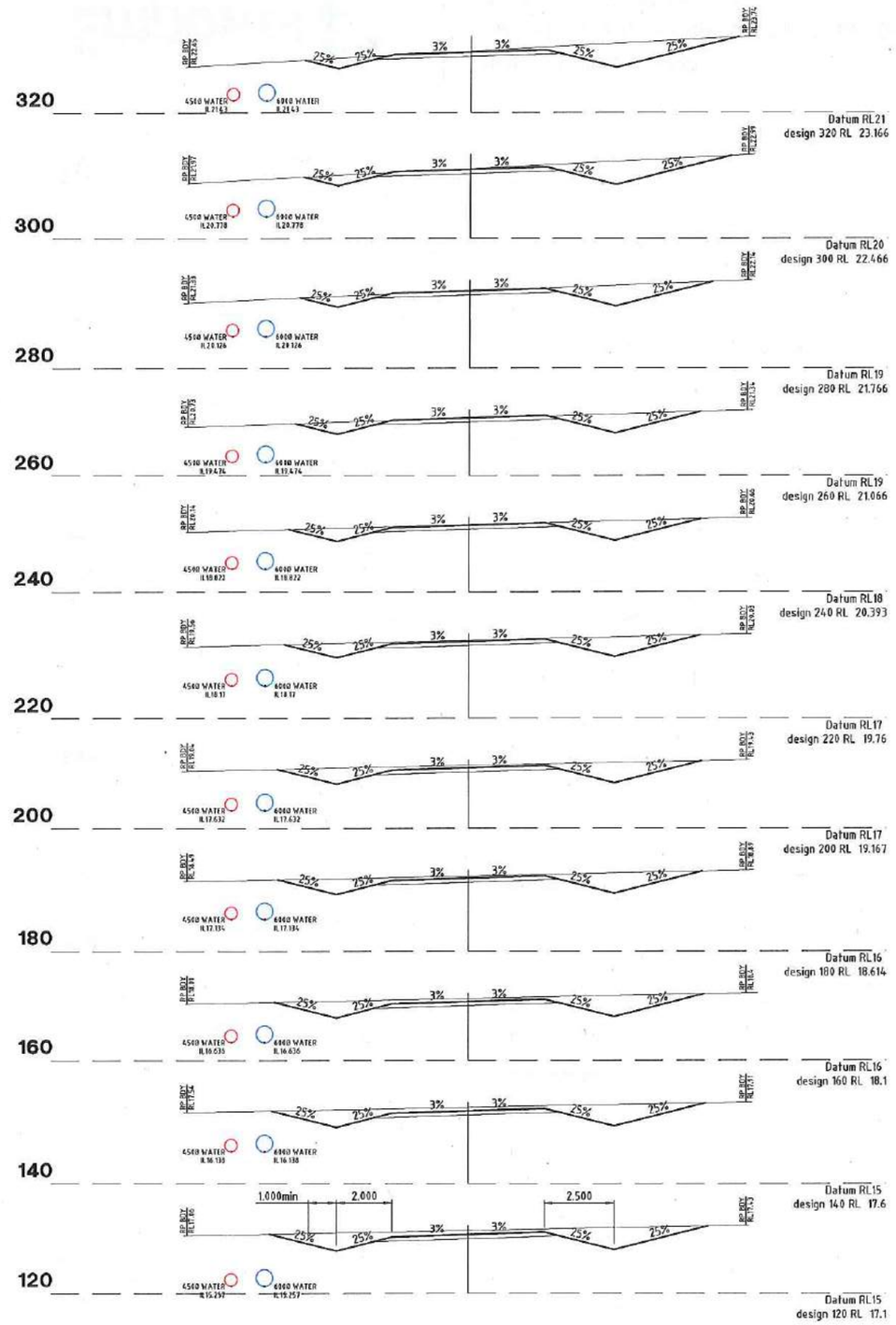

No.	Amendments	Drawn	Design	Appd	Registered Engineer	Reg No.	Date
A	ISSUED FOR TENDER WITH DOUGLAS SHIRE COUNCIL AMENDMENTS	ESS					05/12/16

This drawing cannot be copied or reproduced in any form or used for any purpose other than that originally intended without the written permission of Empower Engineers and Project Managers ©COPYRIGHT 2017

DOUGLAS SHIRE COUNCIL

Empower ENGINEERS & PROJECT MANAGERS ABN 23 010 743 692

Client: DOUGLAS SHIRE COUNCIL

Project: PORT DOUGLAS WATER STORAGE AND TRUNK WATER SUPPLY

Title: ACCESS ROAD CROSS SECTIONS (SHEET 1 OF 2)

Datum: AHD PSM 156708 RL 7.368 (MGA) COORD

FOR TENDER

Project No. B00217 Drawing No. CR003 Rev A

Plot Date: 26/12/2017 9:07:19 AM File Name: B:\Jobs\Jobs - Consulting\JOBS\B00217 Port Douglas Reservoir\4. CIVIL_CROSS\2 CURRENT\Preliminary Design\T14139-RLX User: CHRIS MOSSON

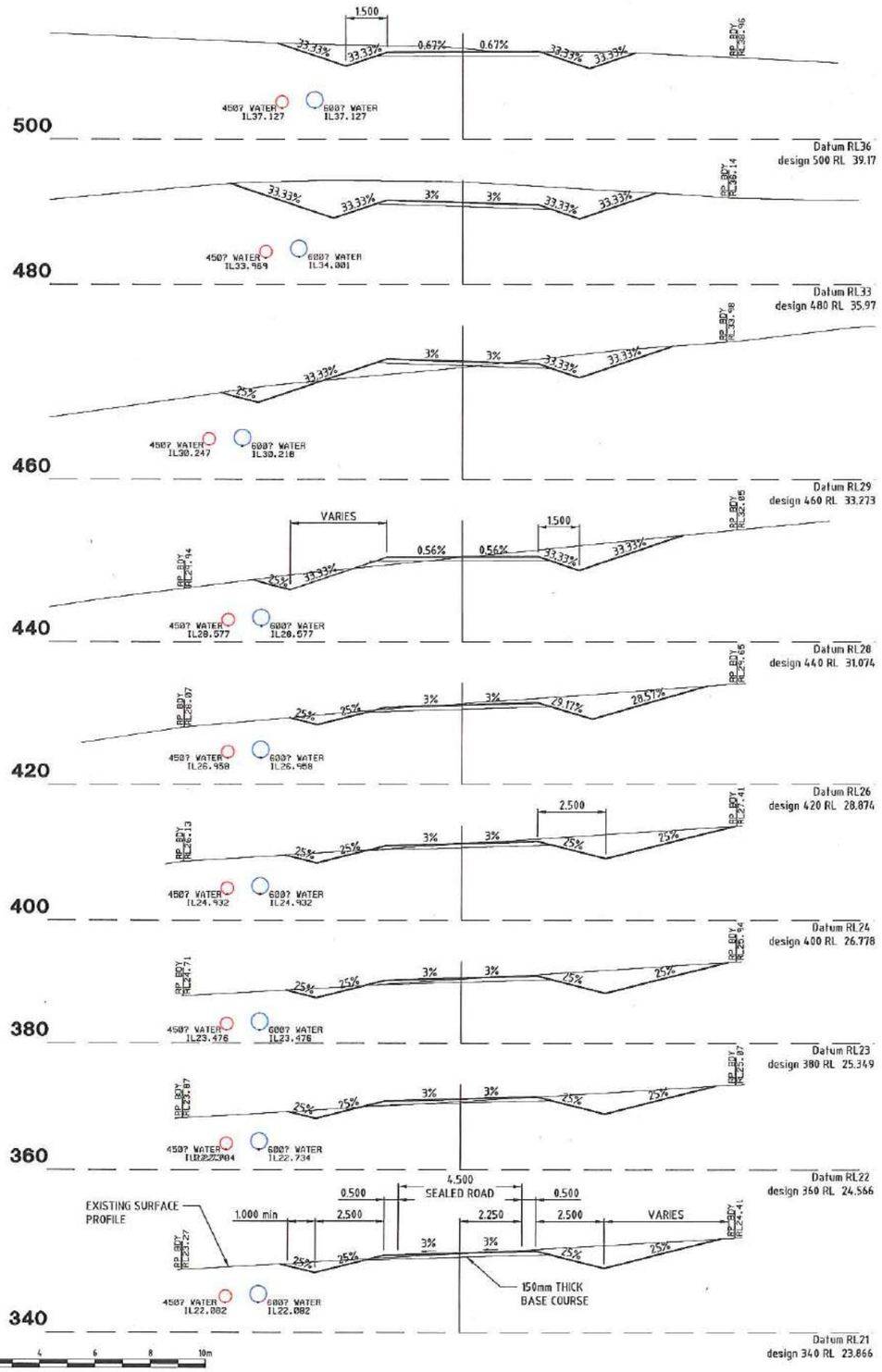

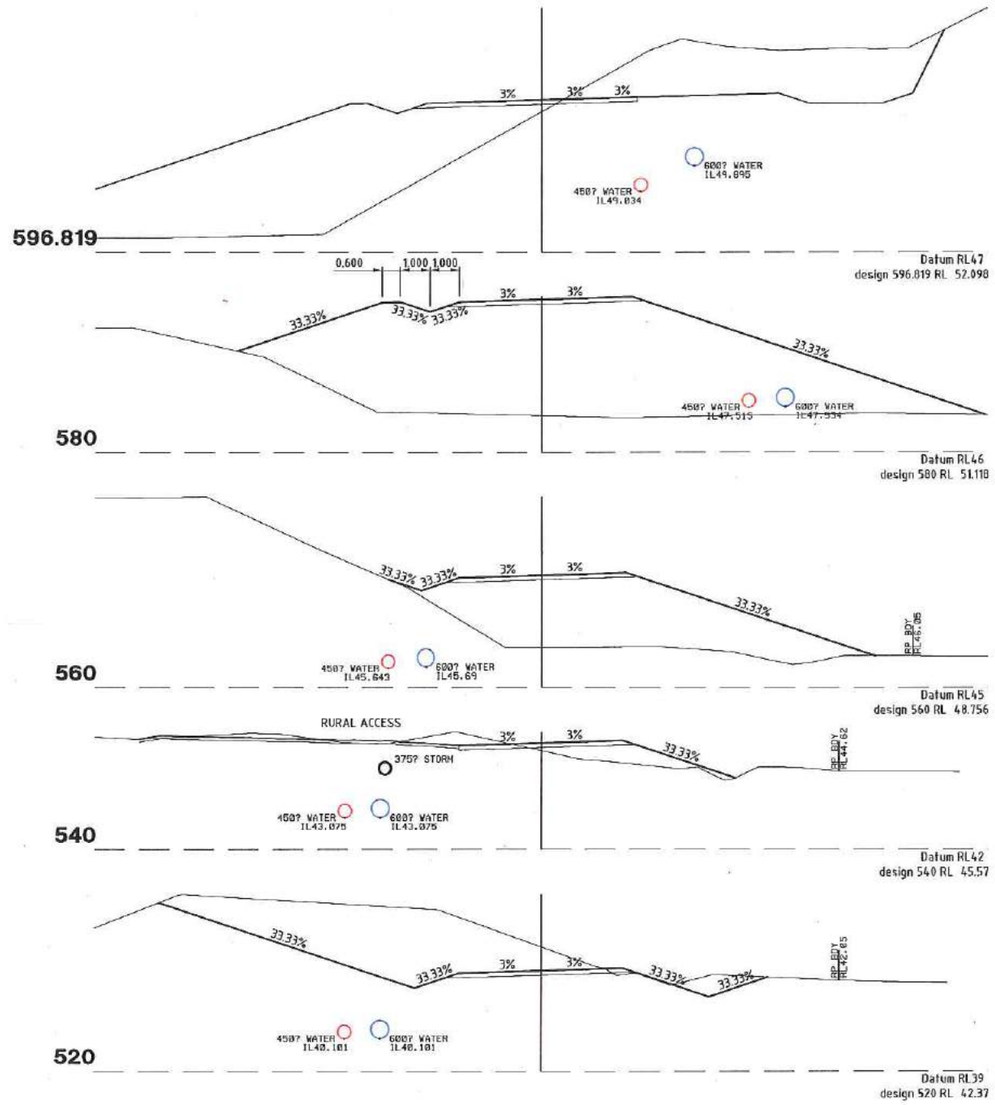

No.	Amendments	Drawn	Design	Appd	Registered Engineer	Reg No.	Date
A	ISSUED FOR TENDER WITH DOUGLAS SHIRE COUNCIL AMENDMENTS.	ESS					05/12/16

This drawing cannot be copied or reproduced in any form or used for any purpose other than that originally intended without the written permission of Empower Engineers and Project Managers. © COPYRIGHT 2017

DOUGLAS SHIRE COUNCIL

Empower ENGINEERS & PROJECT MANAGERS ABN 23 010 743 692

Client: DOUGLAS SHIRE COUNCIL

Project: PORT DOUGLAS WATER STORAGE AND TRUNK WATER SUPPLY

Title: ACCESS ROAD CROSS SECTIONS (SHEET 2 OF 2)

Datum: AHD PSM 156708 RL 7358 (MGA) COORD

FOR TENDER

Project No. B00217 Drawing No. CR004 Rev A

User: CHRIS VOSSOM File Name B:\Brisbane - Consulting\JOBS\B0217\B00217 Port Douglas Reservoir\1 CIVIL\CROSS\A2 FOR\B00217\Preliminary Design\T14059-A.DX
Plot Date: 21/12/2017 14:11:19 AM

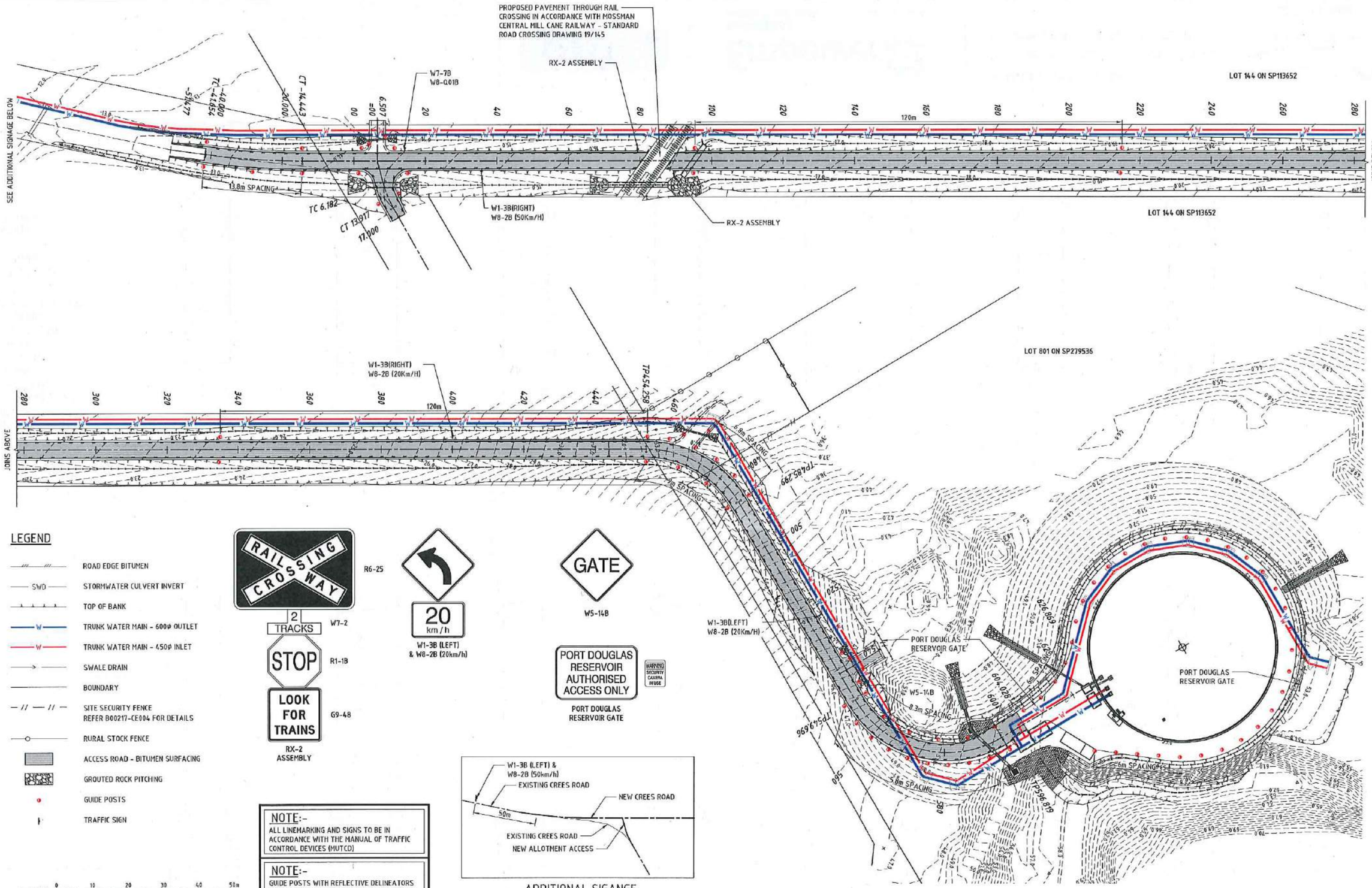

LEGEND

- ROAD EDGE BITUMEN
- SWD — STORMWATER CULVERT INVERT
- TOP OF BANK
- W — TRUNK WATER MAIN - 600ø OUTLET
- W — TRUNK WATER MAIN - 450ø INLET
- SWALE DRAIN
- BOUNDARY
- SITE SECURITY FENCE REFER B00217-CE004 FOR DETAILS
- RURAL STOCK FENCE
- ACCESS ROAD - BITUMEN SURFACING
- GROUTED ROCK PITCHING
- GUIDE POSTS
- TRAFFIC SIGN

R6-25 W7-2 R1-1B G9-48

RX-2 ASSEMBLY

W1-3B (LEFT) & W8-2B (20km/h)

W5-14B

PORT DOUGLAS RESERVOIR GATE

NOTE:-
ALL LINEMARKING AND SIGNS TO BE IN ACCORDANCE WITH THE MANUAL OF TRAFFIC CONTROL DEVICES (MUTCD)

NOTE:-
GUIDE POSTS WITH REFLECTIVE DELINEATORS TO BE INSTALLED AND SPACED AS PER MUTCD PART 2 SECTION 4.2.4

ADDITIONAL SIGANGE
N.T.S

SCALE 1:500 (A1) 1:1000 (A3)
DO NOT SCALE USE ONLY THE DIMENSIONS PROVIDED.

No.	Amendments	Drawn	Design	Appd	Registered Engineer	Reg No.	Date
A	ISSUED FOR TENDER WITH DOUGLAS SHIRE COUNCIL AMENDMENTS	ESS					05/12/16

This drawing cannot be copied or reproduced in any form or used for any purpose other than that originally intended without the written permission of Empower Engineers and Project Managers ©COPYRIGHT 2017

DOUGLAS SHIRE COUNCIL

Empower ENGINEERS & PROJECT MANAGERS ABN 23 010 743 692

Client: DOUGLAS SHIRE COUNCIL

Project: PORT DOUGLAS WATER STORAGE AND TRUNK WATER SUPPLY

Title: SIGNS LAYOUT PLAN

Datum: AHD PSM 156708 RL 7358 (MGA) COORD

NOT FOR CONSTRUCTION

Project No. / Drawing No.: B00217-CR005

Rev: A

Plot Date: 20/12/2017 9:37:29 AM User: CHRIS MCBSON File Name: S:\Brisbane - Consulting\JOBS\B0021700 Port Douglas Reservoir\4 CIVIL-DRWGS\4.2 CURRENT\Preliminary Design\T01031-R1.X

NOTE:-
CULVERTS TO BE BUILT AND INSTALLED IN ACCORDANCE WITH DEPARTMENT OF TRANSPORT AND MAIN ROADS STANDARD DRAWINGS.

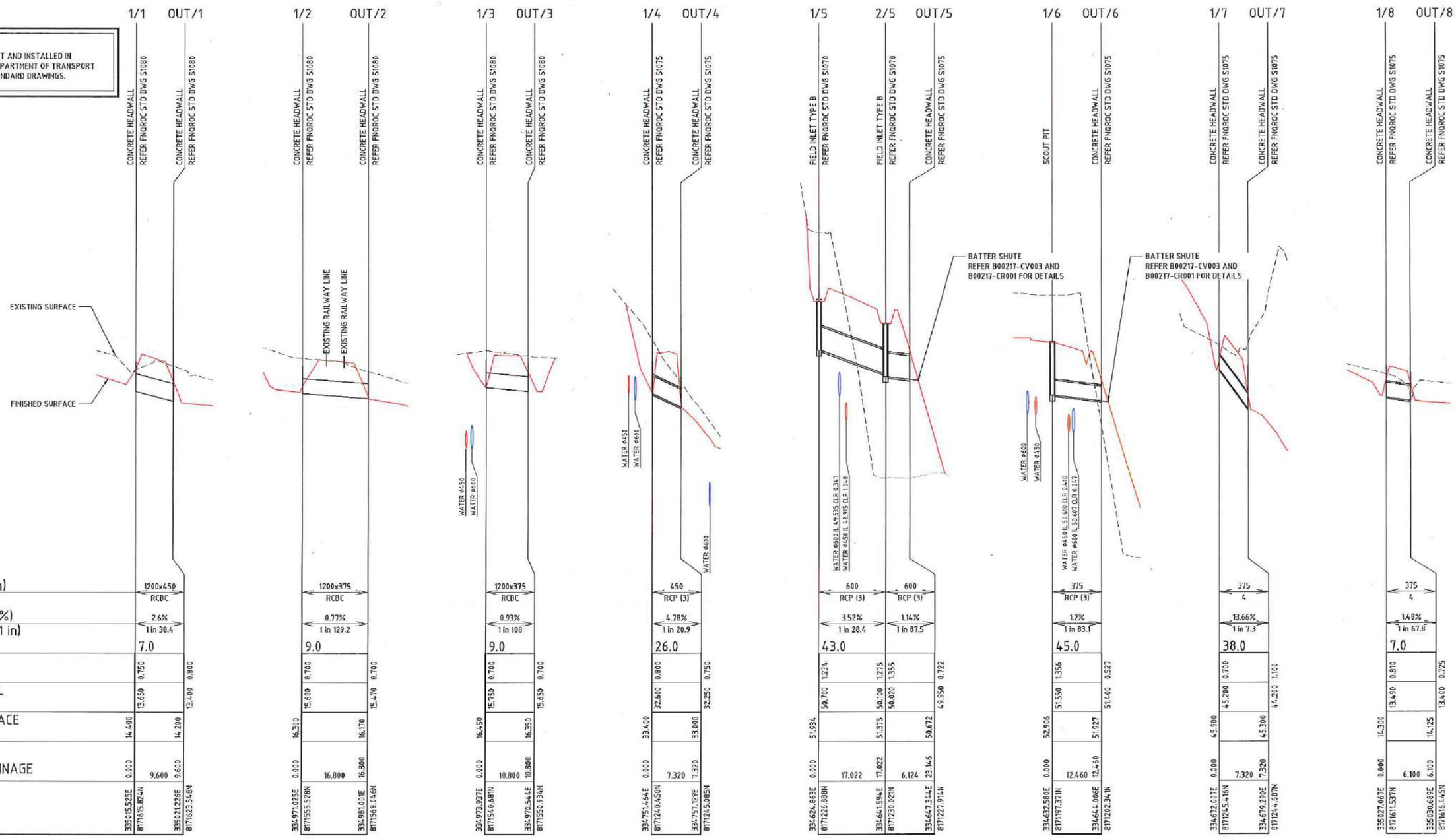

SCALE 1:500 (A1) 1:1000 (A3) HORIZONTAL

SCALE 1:50 (A1) 1:100 (A3) VERTICAL

DO NOT SCALE USE ONLY THE DIMENSIONS PROVIDED.

No.	Amendments	Drawn	Design	Appd	Registered Engineer	Reg No.	Date
A	ISSUED FOR TENDER WITH DOUGLAS SHIRE COUNCIL AMENDMENTS	ESS					05/12/16

This drawing cannot be copied or reproduced in any form or used for any purpose other than that originally intended without the written permission of Empower Engineers and Project Managers © COPYRIGHT 2017

DOUGLAS SHIRE COUNCIL

Empower ENGINEERS & PROJECT MANAGERS ABN 23 010 743 692

Client: DOUGLAS SHIRE COUNCIL

Project: PORT DOUGLAS WATER STORAGE AND TRUNK WATER SUPPLY

Title: STORMWATER LONGITUDINAL SECTIONS

Datum: AHD PSM 156708 RL 7359 (MGA) COORD

FOR TENDER

Project No. B00217 | Drawing No. CR006 | Rev A

Plot Date: 27/02/2017 9:48:27 AM User: CHRIS.HOBSON File Name: B:\Brisbane - Consulting\JOBS\B41328\B40217 Port Douglas Reservoir\41.CIVIL_DRGS\41.2 CURRENT\Preliminary Designs\CIVIL SHEET LONGITUDINAL SECTIONS

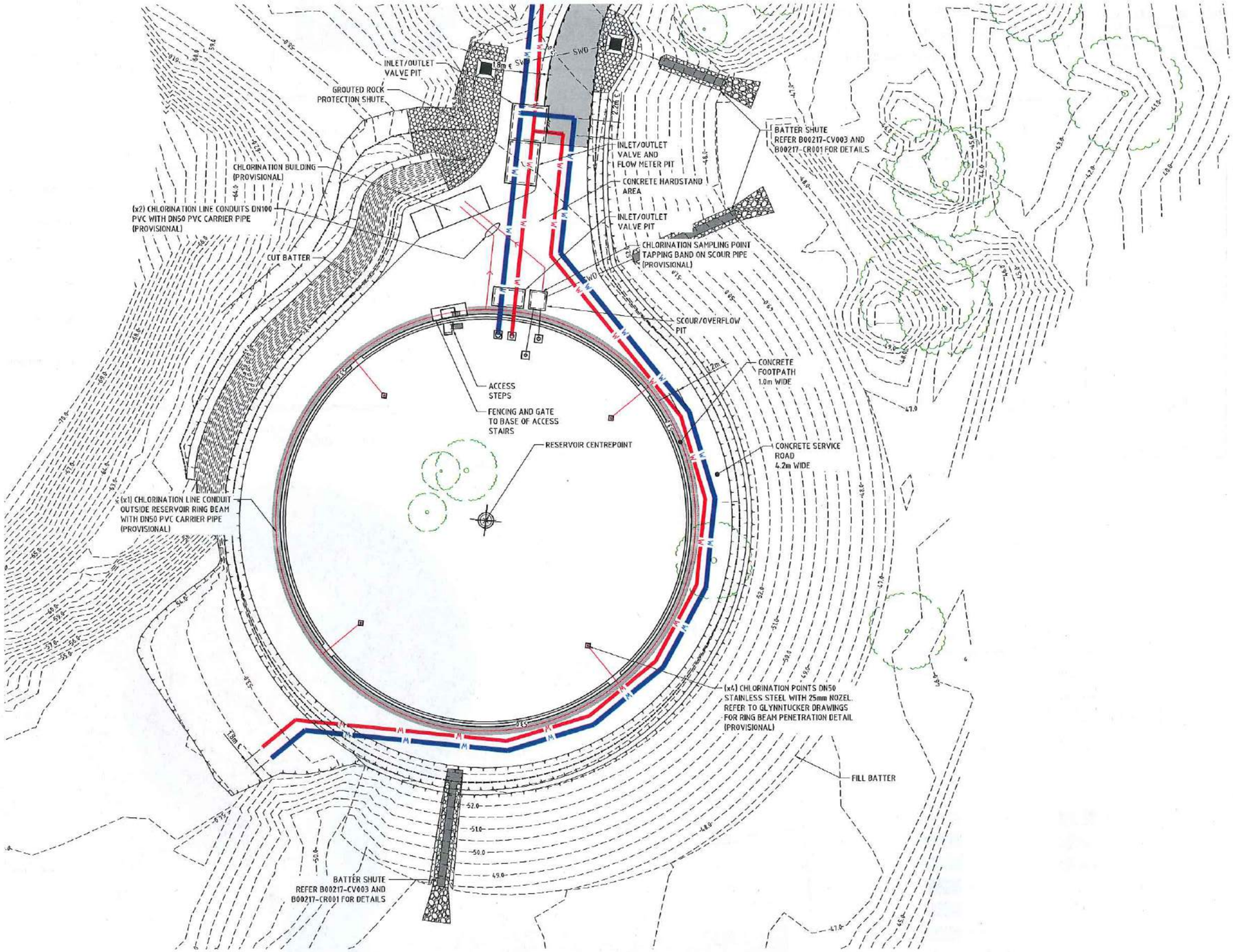

LEGEND

- ROAD EDGE BITUMEN
- SWD — STORMWATER CULVERT INVERT
- TOP OF BANK
- TRUNK WATER MAIN - 600Φ OUTLET
- TRUNK WATER MAIN - 450Φ INLET
- SWALE DRAIN
- BOUNDARY
- CHLORINATION LINE - 100Φ PVC
- ACCESS ROAD - BITUMEN SURFACING
- CONCRETE HARDSTAND
- GROUTED ROCK PITCHING
- EXISTING TREE

No.	Amendments	Drawn	Design	Appd	Registered Engineer	Reg No.	Date
A	ISSUED FOR TENDER WITH DOUGLAS SHIRE COUNCIL AMENDMENTS	ESS					05/12/16

This drawing cannot be copied or reproduced in any form or used for any purpose other than that originally intended without the written permission of Empower Engineers and Project Managers © COPYRIGHT 2017

DOUGLAS SHIRE COUNCIL

Empower ENGINEERS & PROJECT MANAGERS ABN 23 010 743 692

Client: DOUGLAS SHIRE COUNCIL

Project: PORT DOUGLAS WATER STORAGE AND TRUNK WATER SUPPLY

Title: RESERVOIR LAYOUT

Datum: AHD PSM 156708 RL 7358 (MGA) COORD

FOR TENDER

Project No. / Drawing No.: B00217-CE001

Rev: A

Plot Date: 21/02/2017 9:11:35 AM File Name: B:\Brisbane - Consulting\JOBS\B0021\B00217 Port Douglas Reservoir\4.CIVIL-DRGS\4.2.CONSTRUCT\Preliminary Design\TB0035-RESERVOIR User: CHRIS HOBSON

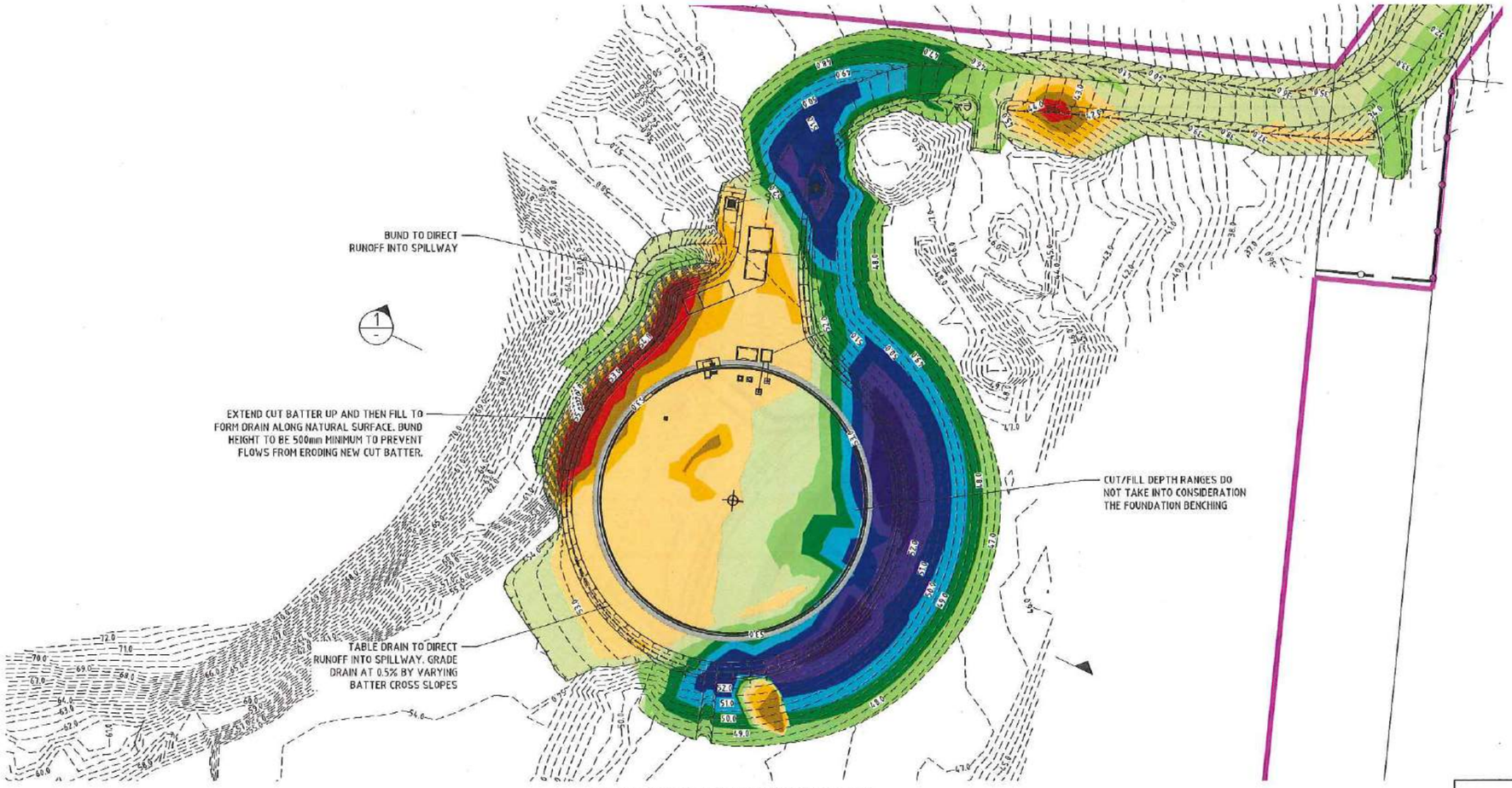

RESERVOIR SITE EARTHWORKS PLAN

SCALE 1:500

0 10 20 30 40 50m

SCALE 1:500 (A1) 1:1000 (A3)
DO NOT SCALE USE ONLY THE DIMENSIONS PROVIDED.

EARTHWORKS DEPTH RANGE

FILL 5m +	CUT 0.0m - 1m
FILL 4m - 5m	CUT 1m - 2m
FILL 3m - 4m	CUT 2m - 3m
FILL 2m - 3m	CUT 3m - 4m
FILL 1m - 2m	CUT 4m - 5m
FILL 0.0m - 1m	CUT 5m +

LEGEND

- LOW STRENGTH ROCK LAYER DEPTH VARIES
- BENCHING AT 1V:4H (OR FLATTER) AND FOUNDED ON MINIMUM MEDIUM STRENGTH ROCK
- CONTROLLED FILL
- SITE BOUNDARY

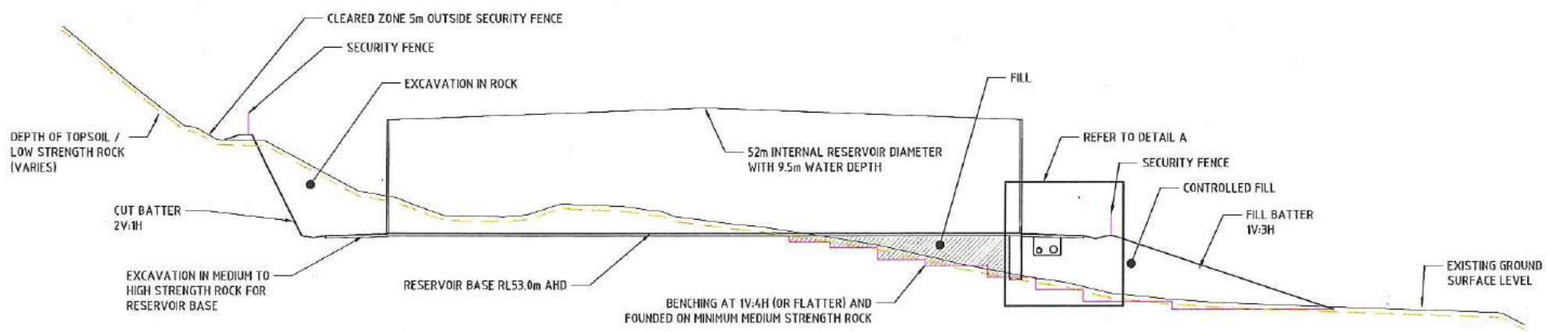

SECTION 1 - RESERVOIR FOOTPRINT

SCALE 1:250

0 5 10 15 20 25m

SCALE 1:250 (A1) 1:500 (A3)
DO NOT SCALE USE ONLY THE DIMENSIONS PROVIDED.

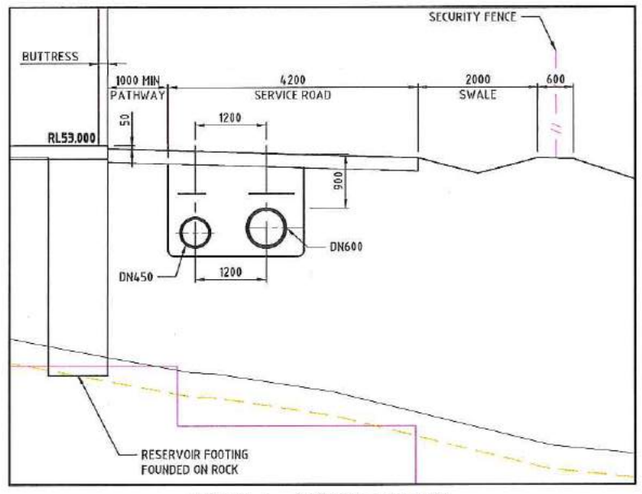

DETAIL A - TYPICAL SECTION

SCALE 1:50

0 1 2 3 4 5m

SCALE 1:50 (A1) 1:100 (A3)
DO NOT SCALE USE ONLY THE DIMENSIONS PROVIDED.

No.	Amendments	Drawn	Design	Appd	Registered Engineer	Reg No.	Date
A	ISSUED FOR TENDER WITH DOUGLAS SHIRE COUNCIL AMENDMENTS	ESS					05/12/16

This drawing cannot be copied or reproduced in any form or used for any purpose other than that originally intended without the written permission of Empower Engineers and Project Managers © COPYRIGHT 2017

DOUGLAS SHIRE COUNCIL

Empower ENGINEERS & PROJECT MANAGERS ABN 23 010 743 692

Client: DOUGLAS SHIRE COUNCIL

Project: PORT DOUGLAS WATER STORAGE AND TRUNK WATER SUPPLY

Title: RESERVOIR SITE EARTHWORKS

Datum: AHD PSM 156708 RL 7358 (MGA) COORD

N

FOR TENDER

Project No. B00217 Drawing No. CE002 Rev A

Plot Date: 21/12/2017 9:10:53 AM User: DRIES HOBSON File Name: N:\Brisbane - Consulting\30815 B1\2216\B00217 Port Douglas Reservoir\4. CIVIL\DRIGS\4.2 CURRENT\Preliminary Design\T0813-RESERVOIR

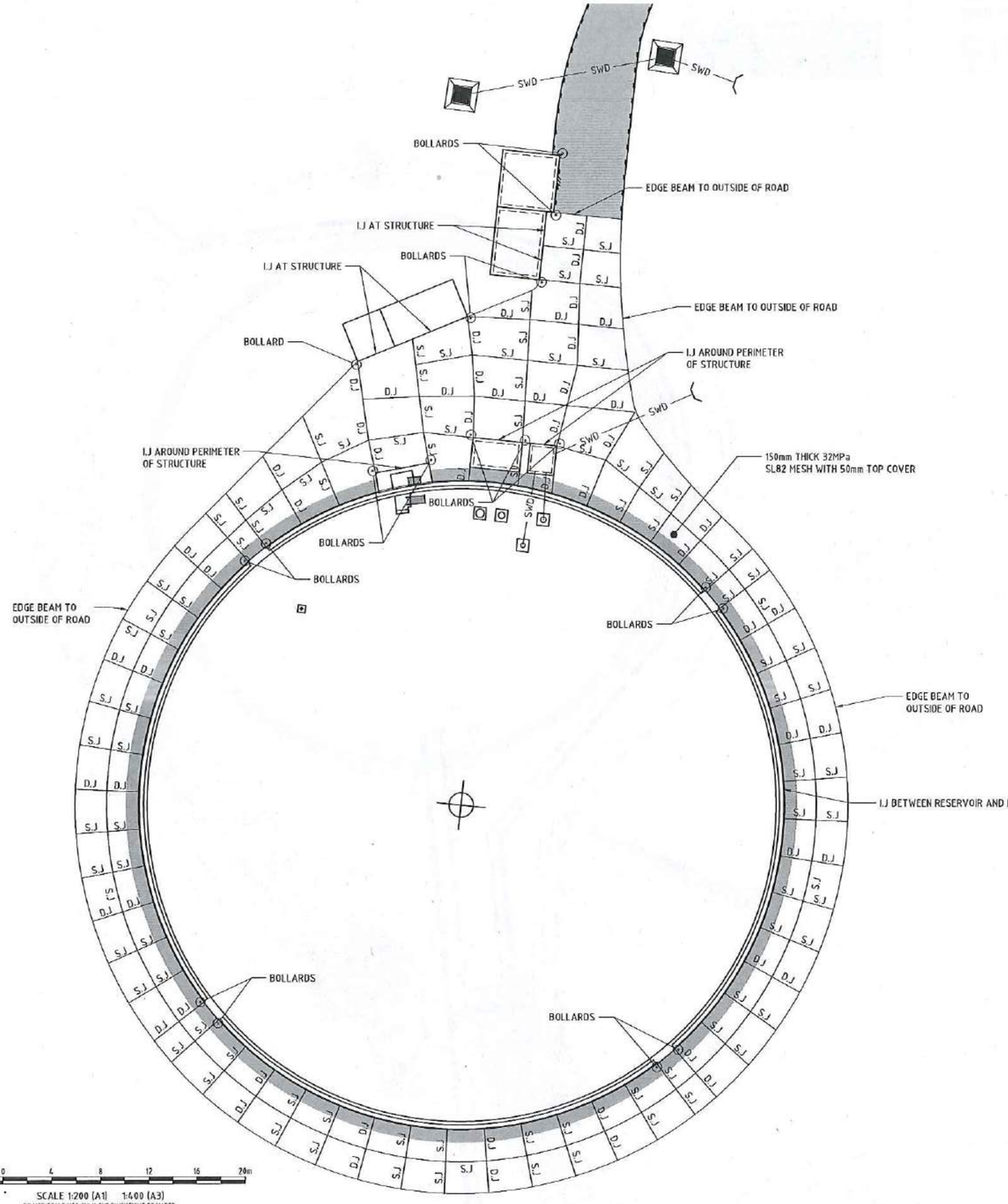

SCALE 1:200 (A1) 1:400 (A3)
DO NOT SCALE USE ONLY THE DIMENSIONS PROVIDED.

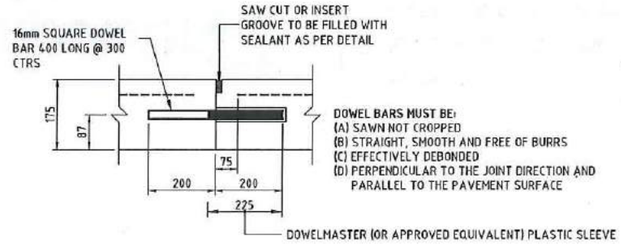

NOTE:
EDGE THICKENING 35mm DEEP FOR 300mm BOTH SIDES OF JOINT

TYPICAL DETAIL - DOWEL JOINT (D.J)
N.T.S.

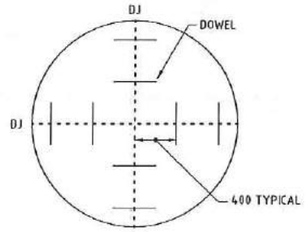

TYPICAL DETAIL - DOWEL JOINT INTERSECTION
N.T.S.

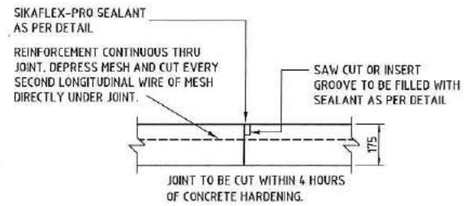

TYPICAL DETAIL - SAWN JOINT (S.J)
N.T.S.

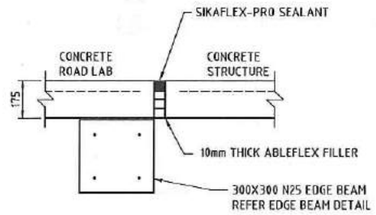

TYPICAL DETAIL - ISOLATION JOINT (I.J)
N.T.S.

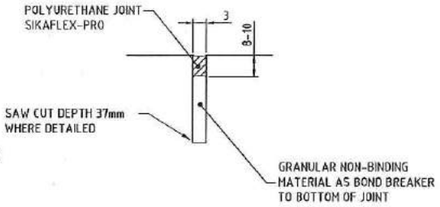

TYPICAL DETAIL - SEALANT
N.T.S.

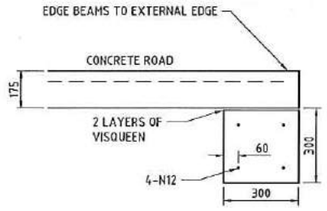

TYPICAL DETAIL - EDGE BEAM
N.T.S.

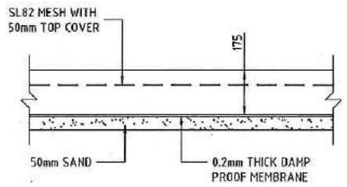

TYPICAL DETAIL - CONCRETE FOOTPATH AND ROAD
N.T.S

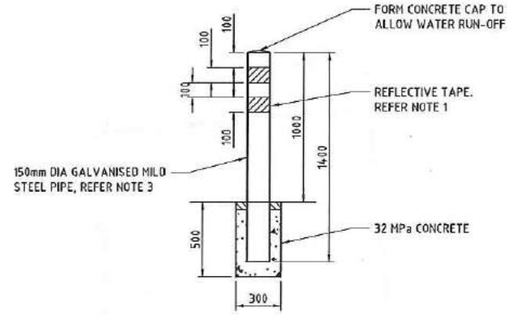

TYPICAL DETAIL - PIPE BOLLARD
N.T.S.

NOTE:
1. TAPE TO BE YELLOW CLASS 1 (AS1906.1) UNLESS LOCAL REGULATIONS SPECIFY OTHERWISE
2. ALLOW 30-50mm FOR REINSTATEMENT OF EXISTING PAVEMENT
3. STEEL PIPE TO BE MIN. 3mm WALL THICKNESS PAINTED WHITE: 2 COATS GLOSS ENAMEL AND 1 UNDERCOAT LAYER

No.	Amendments	Drawn	Design	Appd	Registered Engineer	Reg No.	Date
A	ISSUED FOR TENDER WITH DOUGLAS SHIRE COUNCIL AMENDMENTS	ESS					05/12/16

This drawing cannot be copied or reproduced in any form or used for any purpose other than that originally intended without the written permission of Empower Engineers and Project Managers ©COPYRIGHT 2017

DOUGLAS SHIRE COUNCIL

Empower ENGINEERS & PROJECT MANAGERS ABN 23 010 743 692

Client: DOUGLAS SHIRE COUNCIL
Project: PORT DOUGLAS WATER STORAGE AND TRUNK WATER SUPPLY
Title: RESERVOIR CONCRETE JOINTING LAYOUT PLAN AND DETAILS

Datum: AHD PSM 156708 RL 7358 (MGA) COORD

FOR TENDER

Project No. B00217 Drawing No. CE003 Rev A

Plot Date: 21/12/2017 11:52 AM User: CHRIS HUSSON File Name: B:\Brisbane - Consulting\JOBS\B0221\B00217 Port Douglas Reservoir\4 CIVIL\DWGs\2 CURRENT\Preliminary Design\Tech\RESERVOIR

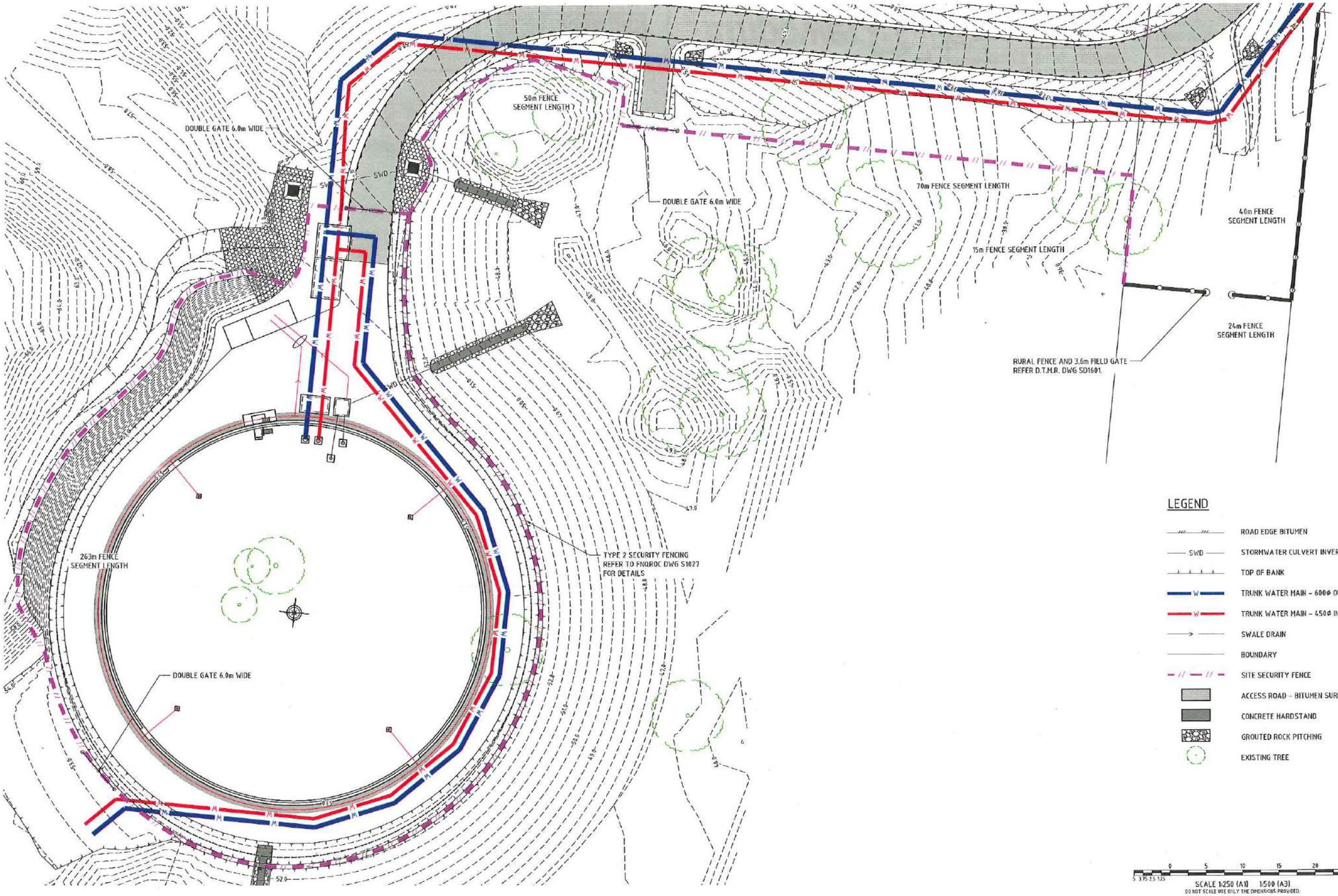

No.	Amendments	Drawn	Design	Appd	Registered Engineer	Reg No.	Date
A	ISSUED FOR TENDER WITH DOUGLAS SHIRE COUNCIL AMENDMENTS	ESS					05/12/16

This drawing cannot be copied or reproduced in any form or used for any purpose other than that originally intended without the written permission of Empower Engineers and Project Managers © COPYRIGHT 2012

DOUGLAS SHIRE COUNCIL

Empower ENGINEERS & PROJECT MANAGERS ABN 23 010 743 692

Client: DOUGLAS SHIRE COUNCIL

Project: PORT DOUGLAS WATER STORAGE AND TRUNK WATER SUPPLY

Title: RESERVOIR SITE FENCING

Datum: AHD PSM 156708 RL 7358 (MGA) COORD

FOR TENDER

Project No. B00217 | Drawing No. CE004 | Rev. A

GENERAL NOTES

1. THIS DRAWING SHALL BE READ IN CONJUNCTION WITH DOUGLAS SHIRE COUNCIL STANDARD DRAWINGS (WATER) AND OTHER CONTRACT DOCUMENTATION AND DRAWINGS.
2. ALL MATERIALS AND WORKMANSHIP SHALL BE IN ACCORDANCE WITH THE REQUIREMENTS OF THE CURRENT W.S.A. CODES AND THE BY-LAWS OF THE RELEVANT BUILDING AUTHORITY.
3. THE CONTRACTOR SHALL VERIFY ALL DIMENSIONS ON SITE PRIOR TO CONSTRUCTION. DRAWINGS SHALL NOT BE SCALED.
4. ANY DISCREPANCY SHALL BE REFERRED TO THE SUPERINTENDENT BEFORE PROCEEDING WITH WORK.
5. NO SUBSTITUTE MATERIALS SHALL BE USED WITHOUT THE APPROVAL OF THE SUPERINTENDENT.
6. THE CONTRACTOR SHALL MAKE THEMSELVES FULLY CONVERSANT WITH ALL EXISTING SERVICES AND STRUCTURES WITHIN AND ADJACENT TO THE SITE OF THE WORK AND SHALL BE RESPONSIBLE FOR ANY DAMAGE TO THESE SERVICES AND STRUCTURES DURING THE COURSE OF THE CONTRACT.
7. ALL WORK SHALL BE CARRIED OUT IN COMPLIANCE WITH THE QUEENSLAND WORKPLACE HEALTH AND SAFETY ACT, REGULATIONS AND GUIDELINES. COMPLIANCE WITH THE ELECTRICAL SAFETY ACT 2002 INCLUDING ANY CODE OF PRACTICE UNDER THE ACT AND THE ELECTRICAL SAFETY REGULATION 2002 INCLUDING ANY SAFETY EXCLUSION ZONES DEFINED IN THE REGULATION.

ENVIRONMENTAL MANAGEMENT APPROVAL NOTES

1. GENERAL
   - a. ALL ENVIRONMENTAL PROTECTION MEASURES SHALL BE IMPLEMENTED PRIOR TO ANY CONSTRUCTION WORK, INCLUDING CLEARING, COMMENCING.
   - b. THE CONTRACTOR SHALL PROVIDE AN APPROVED SEDIMENT AND EROSION CONTROL PLAN PREPARED BY A CERTIFIED PROFESSIONAL.
   - c. CLEARING OF VEGETATION IS TO BE KEPT TO A MINIMUM AND IS TO ONLY COVER THE AREAS AFFECTED BY THE WORKS AND TO BE IN ACCORDANCE WITH SELF ASSESSABLE CODES.
   - d. ALL DISTURBED AREAS ARE TO BE REHABILITATED.
   - e. PIPES, FITTINGS AND CONSTRUCTION MATERIALS ARE TO BE STORED ONLY AT DESIGNATED AREAS.
   - f. VEHICLES MUST BE CLEANED PRIOR TO LEAVING THE SITE TO PREVENT SPREADING OF WEEDS.
2. SOIL
   - a. TOPSOIL AND SUBSOIL SHALL BE STOCKPILED SEPARATELY.
   - b. CARE SHALL BE TAKEN TO PREVENT SEDIMENT FROM ENTERING THE STORMWATER SYSTEM. THIS MAY INVOLVE PLACING APPROPRIATE SEDIMENT CONTROLS AROUND STOCKPILES.
3. SEDIMENT CONTROL
   - a. SILTATION CONTROL MEASURES SHALL BE PLACED DOWNSTREAM OF ALL EXCAVATION WORK & IN ACCORDANCE WITH THE CONTRACTOR'S APPROVED SEDIMENT CONTROL PLAN.
   - b. APPROPRIATE SEDIMENT CONTROLS SHALL BE USED TO PREVENT SEDIMENT FROM ENTERING DRAINAGE CHANNELS.
   - c. NO SOIL SHALL BE STOCKPILED WITHIN 5m OF DRAINAGE CHANNELS.
4. REHABILITATION
   - a. PREDISTURBANCE SOIL PROFILES AND COMPACTION LEVELS ARE TO BE REINSTATED.

PIPELINE NOTES

1. THE CONTRACTOR SHALL PROVIDE ALL PIPES, FITTINGS, THRUST BLOCKS ETC REQUIRED TO CONSTRUCT THE PIPELINES AND PIPELINE APPURTENANCES U.N.O.
2. PIPELINE TO BE CONSTRUCTED ON A CONTINUAL GRADE BETWEEN NOMINATED PIPE INVERT LEVELS AND TO SUIT MINIMUM COVER REQUIREMENTS.
3. COVER TO PIPELINE TO BE 600mm MIN U.N.O.
4. ALIGNMENT TO BE PEGGED AND CONFIRMED PRIOR TO CONSTRUCTION COMMENCING.
5. MAXIMUM PIPE CURVATURE OR JOINT DEFLECTION IS TO BE IN ACCORDANCE WITH THE MANUFACTURER'S RECOMMENDATIONS.
6. THE HORIZONTAL ALIGNMENT MAY BE DEVIATED FROM THE TABULATED LAYOUT TO AVOID UNFORESEEN MINOR OBSTACLES SUCH AS TREES WITH THE CONTRACT ADMINISTRATOR'S APPROVAL.
7. DISTANCES INDICATED ON LONGITUDINAL SECTION ARE MEASURED HORIZONTALLY ALONG THE CONSTRUCTION CENTERLINE.
8. WHILST REASONABLE EFFORT HAS BEEN TAKEN IN LOCATING UNDERGROUND SERVICES, THE CONTRACTOR IS STILL REQUIRED TO VERIFY THE LOCATION OF ALL UNDERGROUND SERVICES WITH THE RELEVANT AUTHORITIES PRIOR TO ANY EXCAVATION. THIS WOULD INCLUDE BUT NOT LIMITED TO A DIAL BEFORE YOU DIG REQUEST.
9. EXCAVATION BEHIND EXISTING THRUST BLOCKS SHALL NOT BE CARRIED OUT WHILST THE EXISTING WATER MAIN IS CHARGED.
10. CONNECTION TO EXISTING DOUGLAS SHIRE COUNCIL WATER MAIN TO BE CARRIED OUT BY CONTRACTOR UNDER D.S.C. STAFF SUPERVISION.
11. EXISTING PIPES THAT ARE TO BE REMOVED FROM SITE SHALL BE DISPOSED OF TO APPROVED COUNCIL LANDFILL. PIPES MAY CONTAIN ASBESTOS, IF SO THEY ARE TO BE REMOVED SO THAT IT DOES NOT CREATE A HEALTH RISK. REMOVAL IS TO BE CARRIED OUT IN ACCORDANCE WITH QUEENSLAND WORKPLACE HEALTH AND SAFETY ACT 2008 AS WELL AS RELEVANT NATIONAL CODES OF PRACTICE FOR THE MANAGEMENT, CONTROL AND SAFE REMOVAL OF ASBESTOS
12. ALL THRUST BLOCKS ARE TO BE SPECIFIED ACCORDING TO GEOTECHNICAL ADVICE ON SOIL TYPE AND TO BE IN ACCORDANCE WITH THE WATER SUPPLY CODE OF AUSTRALIA. (REFER STANDARD DRAWINGS WAT-1200 & 1205) U.N.O.
13. THRUST FLANGES TO CONFORM TO AS 4087 FIGURE B5 AND SHALL BE INTEGRALLY CAST.
14. REFER DWG. FNQROC S2010 AND S2011 FOR DETAILS OF PIPELINE IDENTIFICATION MARKERS.
15. REFER TO WSA03-2011 PART 1 FOR BULKHEAD AND TRENCHSTOP REQUIREMENTS.

LEGEND

- TRUNK WATER MAIN - 600ϕ OUTLET
- TRUNK WATER MAIN - 450ϕ INLET

NOTE:-
REFER TO PLAN B00217-CW007 FOR WATER MAIN SETOUT TABLES AND B00217-CW008 FOR SCHEDULE OF FITTINGS

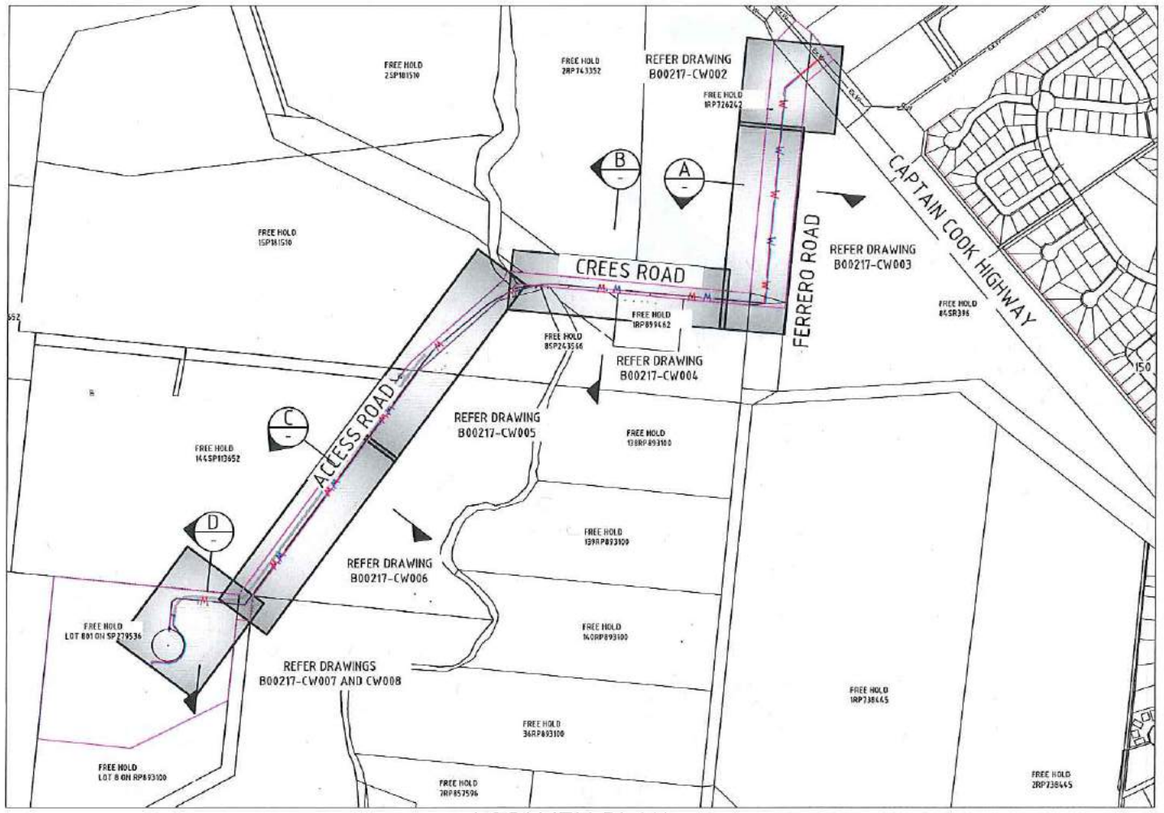

LOCALITY PLAN

SCALE 1:5000

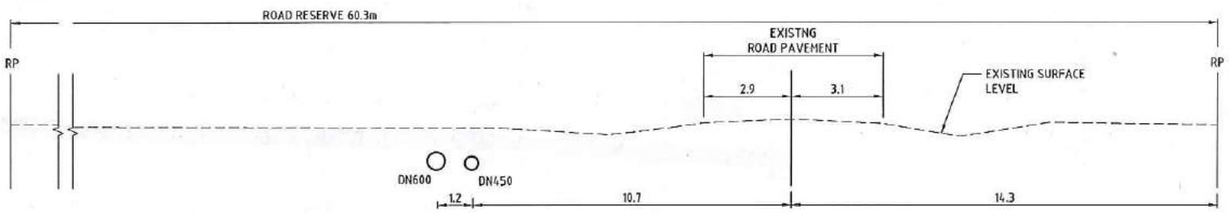

TYPICAL CROSS-SECTION A - FERRERO ROAD

SCALE 1:100

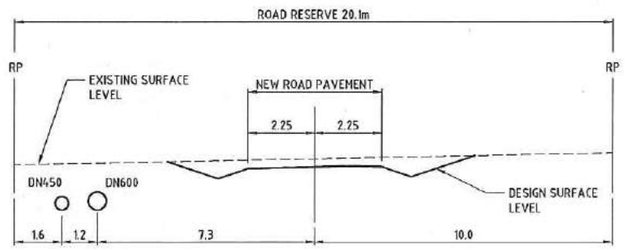

TYPICAL CROSS-SECTION C - NEW ACCESS ROAD

SCALE 1:100

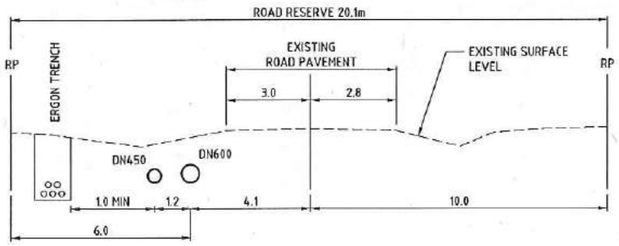

TYPICAL CROSS-SECTION B - CREES ROAD

SCALE 1:100

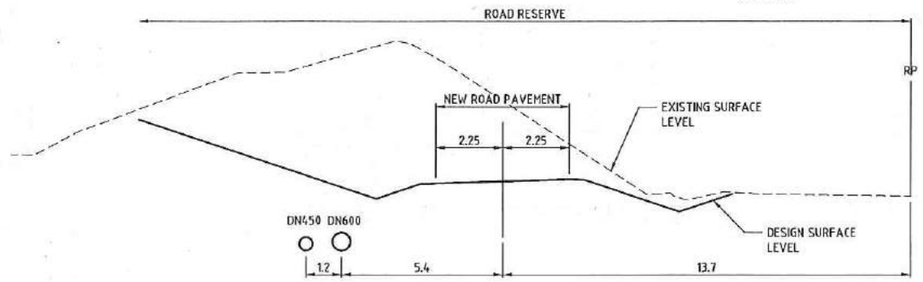

TYPICAL CROSS-SECTION D - CREES ROAD

SCALE 1:100

SCALE 1:5000 (A1) 1:10000 (A3)
DO NOT SCALE USE ONLY THE DIMENSIONS PROVIDED.

SCALE 1:100 (A1) 1:200 (A3)
DO NOT SCALE USE ONLY THE DIMENSIONS PROVIDED.

DIAL BEFORE YOU DIG www.1100.com.au

No.	Amendments	Drawn	Design	Appd	Registered Engineer	Reg No.	Date
A	ISSUED FOR TENDER WITH DOUGLAS SHIRE COUNCIL AMENDMENTS	ESS					05/12/16

This drawing cannot be copied or reproduced in any form or used for any purpose other than that originally intended without the written permission of Empower Engineers and Project Managers © COPYRIGHT 2017

DOUGLAS SHIRE COUNCIL

Empower ENGINEERS & PROJECT MANAGERS ABN 23 010 743 692

Client: DOUGLAS SHIRE COUNCIL
Project: PORT DOUGLAS WATER STORAGE AND TRUNK WATER SUPPLY
Title: TRUNK WATER MAIN NOTES SCHEDULES AND LOCALITY PLAN

Datum: AHD PSM 156708 RL 7358 (MGA) COORD

FOR TENDER

Project No. / Drawing No.: B00217-CW001
Rev: A

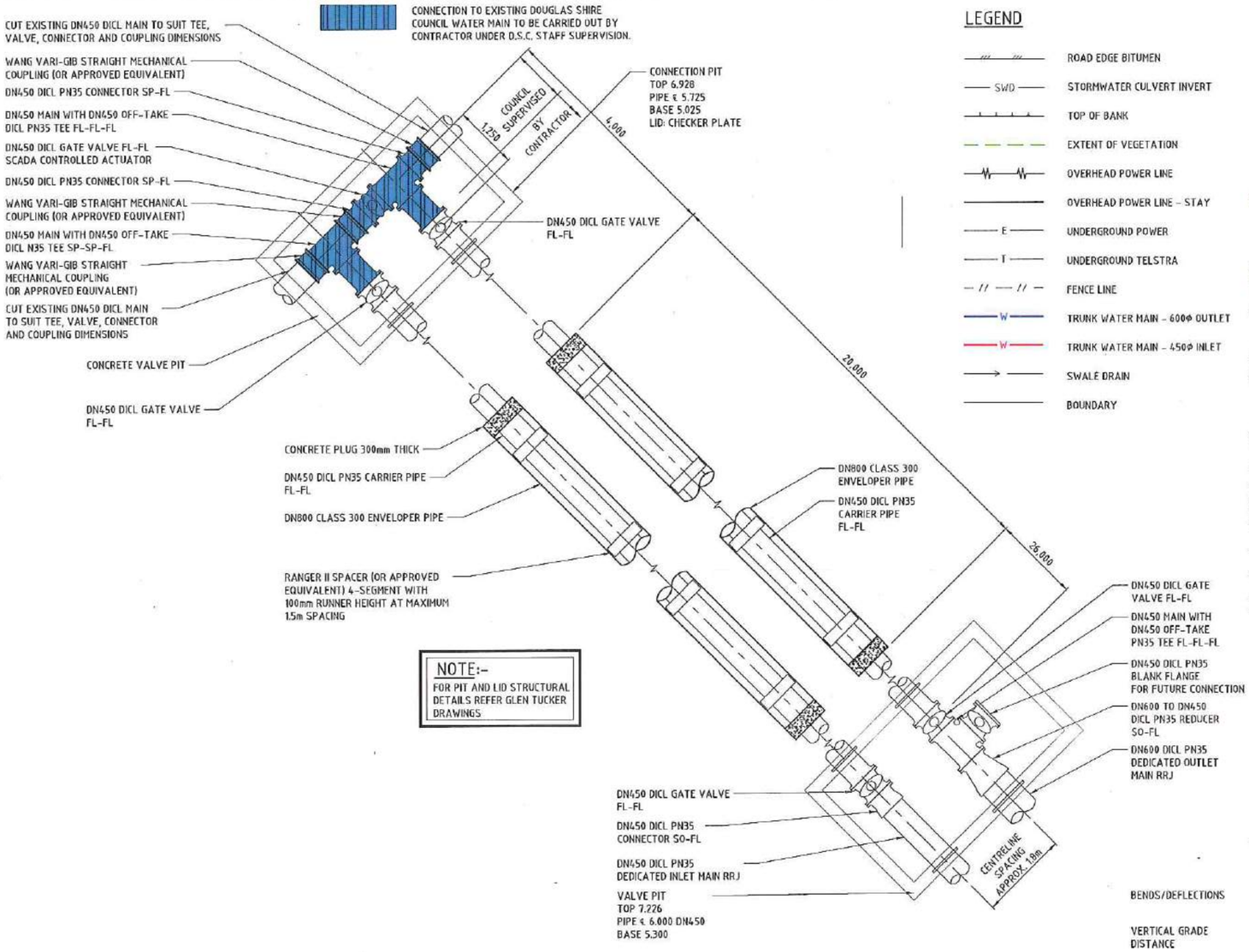

NOTE:-
FOR PIT AND LID STRUCTURAL DETAILS REFER GLEN TUCKER DRAWINGS

LEGEND

- ROAD EDGE BITUMEN
- SWD — STORMWATER CULVERT INVERT
- TOP OF BANK
- EXTENT OF VEGETATION
- OVERHEAD POWER LINE
- OVERHEAD POWER LINE - STAY
- E — UNDERGROUND POWER
- T — UNDERGROUND TELSTRA
- FENCE LINE
- W — TRUNK WATER MAIN - 600Φ OUTLET
- W — TRUNK WATER MAIN - 450Φ INLET
- SWALE DRAIN
- BOUNDARY

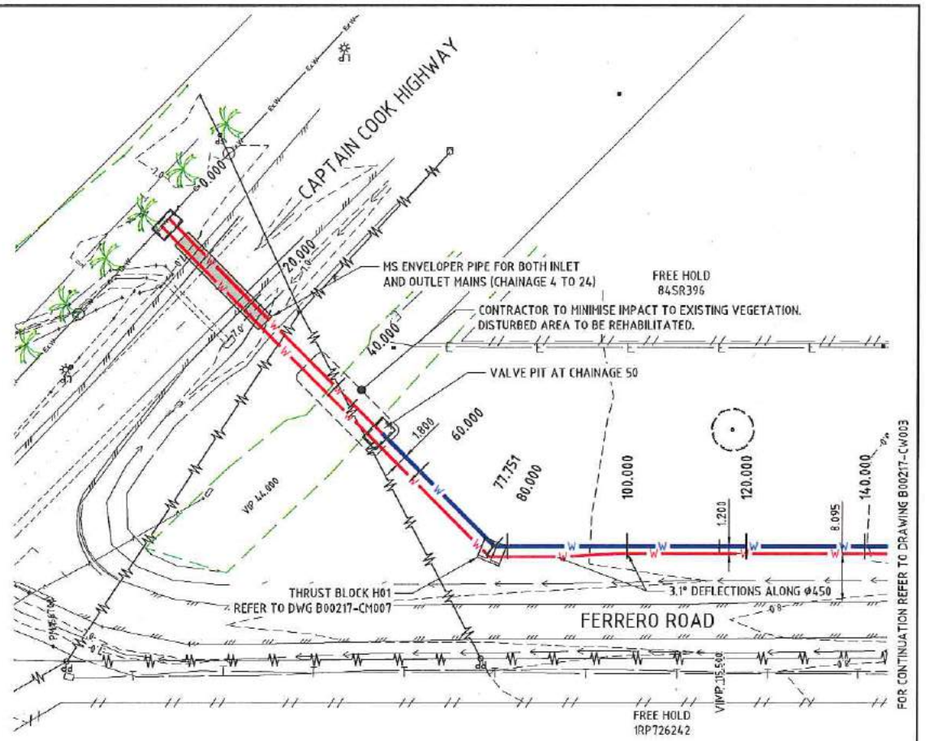

LAYOUT PLAN

SCALE 1:500

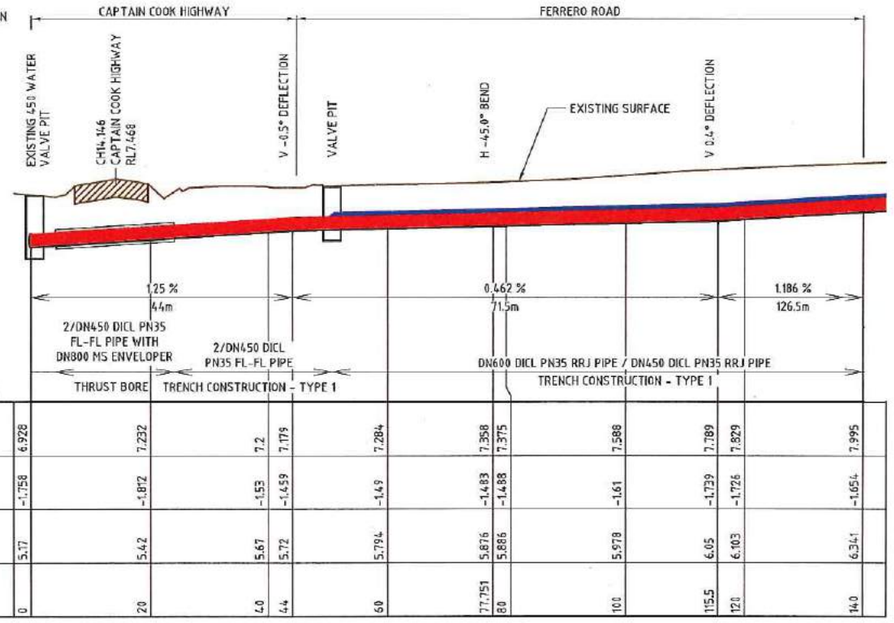

DATUM R.L.0.000

FINISHED SURFACE	6.928		7.232		7.2	7.179		7.284		7.358	7.375		7.588		7.789	7.829		7.995
DEPTH TO INVERT	-1.758		-1.872		-1.53	-1.659		-1.49		-1.483	-1.488		-1.61		-1.739	-1.726		-1.654
OUTLET PIPE INVERT	5.17		5.42		5.67	5.72		5.794		5.876	5.886		5.978		6.05	6.103		6.341
PEGGED CHAINAGE	0		20		40	44		60		77.751	80		100		115.5	120		140

OUTLET WATER MAIN INVERT LEVEL LONGITUDINAL SECTION

INLET WATER MAIN INVERT LEVELS SIMILAR

HORIZONTAL SCALE 1:500 (A1) 1:1000 (A3)

VERTICAL SCALE 1:100 (A1) 1:200 (A3)

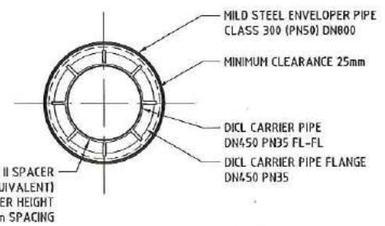

ENVELOPER PIPE SPACER - CROSS SECTION DETAIL

SCALE 1:20

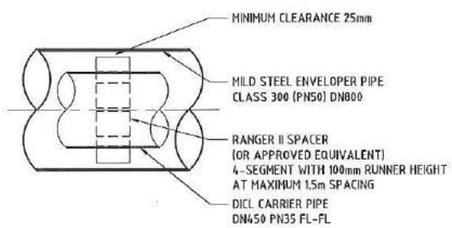

ENVELOPER PIPE SPACER - LONG SECTION DETAIL

SCALE 1:20

SCALE 1:20 (A1) 1:40 (A3) DO NOT SCALE USE ONLY THE DIMENSIONS PROVIDED.

SCALE 1:50 (A1) 1:100 (A3) DO NOT SCALE USE ONLY THE DIMENSIONS PROVIDED.

SCALE 1:500 (A1) 1:1000 (A3) DO NOT SCALE USE ONLY THE DIMENSIONS PROVIDED.

HORIZONTAL SCALE 1:500 (A1) 1:1000 (A3)

VERTICAL SCALE 1:100 (A1) 1:200 (A3) DO NOT SCALE USE ONLY THE DIMENSIONS PROVIDED.

No.	Amendments	Drawn	Design	Appd	Registered Engineer	Reg No.	Date
A	ISSUED FOR TENDER WITH DOUGLAS SHIRE COUNCIL AMENDMENTS	ESS					05/12/16

This drawing cannot be copied or reproduced in any form or used for any purpose other than that originally intended without the written permission of Empower Engineers and Project Managers © COPYRIGHT 2017

DOUGLAS SHIRE COUNCIL

Empower ENGINEERS & PROJECT MANAGERS ABN 23 010 743 692

Client: DOUGLAS SHIRE COUNCIL

Project: PORT DOUGLAS WATER STORAGE AND TRUNK WATER SUPPLY

Title: TRUNK MAIN LONGITUDINAL SECTION (SHEET 1 OF 7)

Datum: AHD PSM 156708 RL 7358 (MGA) COORD

FOR TENDER

Project No. B00217 Drawing No. CW002 Rev A

Plot Date: 21/12/2017 1:46:43 AM File Name: B:\Infocare - Consulting\JOBS\B0217s\B0217\For Douglas Reservoir\4 CIVIL-DRGS\4.2 CURRENT\Preliminary Design\TH439-WAT User: CHRIS HOBSON

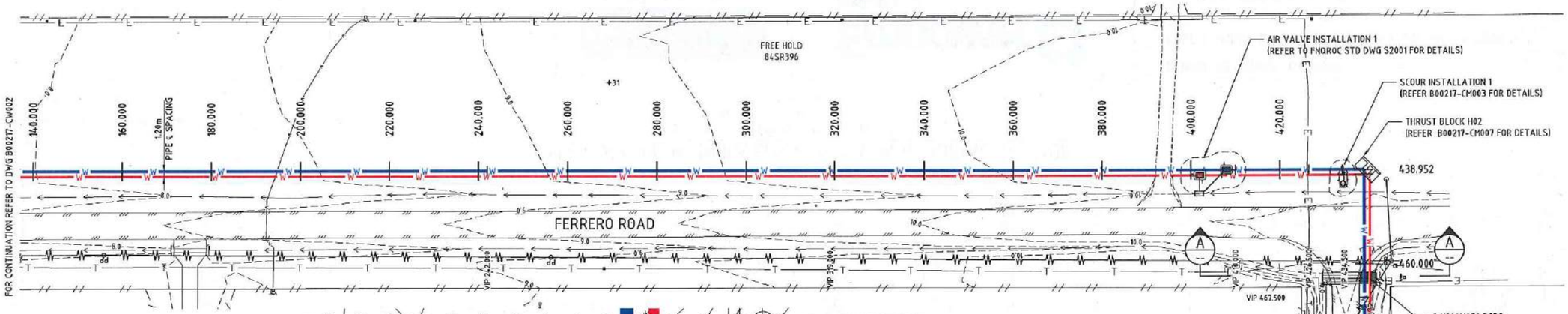

LAYOUT PLAN

SCALE 1:500

NOTES:

1. EXISTING PIPES AND CONCRETE TO BE DEMOLISHED AND REMOVED FROM SITE TO APPROVED COUNCIL LANDFILL.
2. EXISTING PIPES MAY CONTAIN ASBESTOS, IF SO THEY ARE TO BE REMOVED SO THAT IT DOES NOT CREATE A HEALTH RISK. REMOVAL IS TO BE CARRIED OUT IN ACCORDANCE WITH QUEENSLAND WORKPLACE HEALTH AND SAFETY ACT 2008 AS WELL AS RELEVANT NATIONAL CODES OF PRACTICE FOR THE MANAGEMENT, CONTROL AND SAFE REMOVAL OF ASBESTOS.
3. NEW CULVERT TO BE CONSTRUCTED IN ACCORDANCE WITH THE DEPARTMENT OF TRANSPORT AND MAIN ROADS DRAWINGS. 1174, 1316 AND 1317 .

NOTE:-
FOR INFORMATION ONLY. REFER TO GEOTECHNICAL REPORT FOR POTENTIAL GROUND CONDITIONS

NOTE:-
FOR DRAWING LEGEND REFER TO DWG B00217-CW002

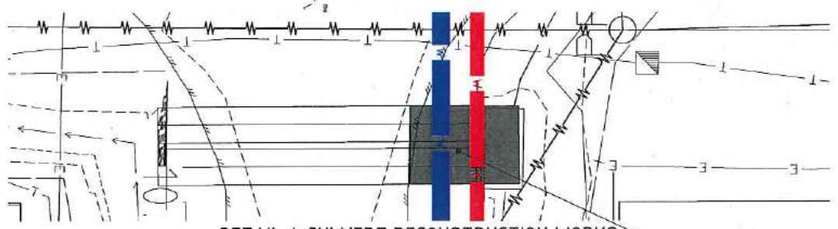

DETAIL A CULVERT RECONSTRUCTION WORKS

SCALE 1:100

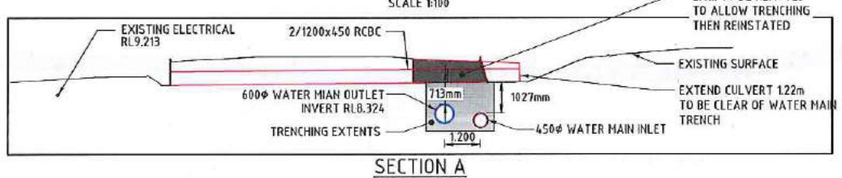

SECTION A

SCALE 1:100

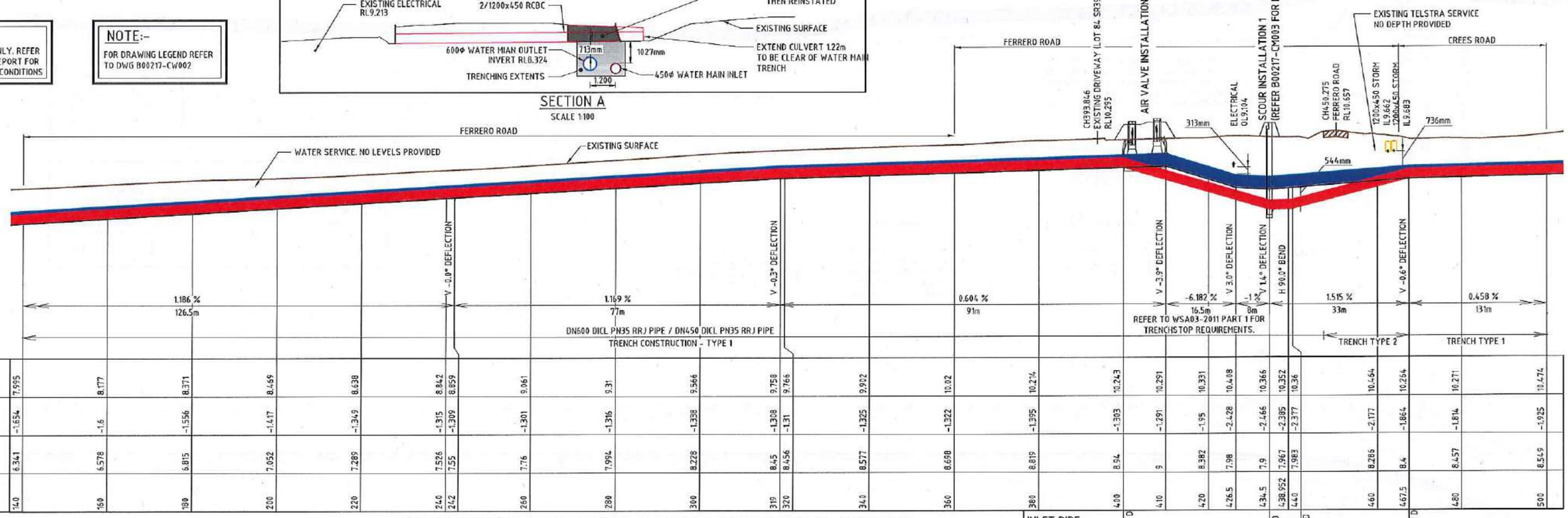

PEGGED CHAINAGE	FINISHED SURFACE	DEPTH TO INVERT	OUTLET PIPE INVERT
140	7.995	-1.654	6.341
160	8.177	-1.6	6.578
180	8.371	-1.556	6.815
200	8.469	-1.417	7.052
220	8.638	-1.349	7.289
240	8.842	-1.315	7.526
242	8.859	-1.309	7.55
260	9.061	-1.301	7.76
280	9.31	-1.316	7.994
300	9.566	-1.338	8.228
319	9.758	-1.308	8.45
320	9.766	-1.31	8.456
340	9.992	-1.325	8.577
360	10.02	-1.322	8.698
380	10.214	-1.395	8.819
400	10.243	-1.303	8.94
410	10.291	-1.291	9
420	10.331	-1.95	8.382
426.5	10.408	-2.428	7.98
434.5	10.366	-2.466	7.9
438.952	10.352	-2.385	7.967
440	10.36	-2.377	7.983
460	10.464	-2.177	8.286
467.5	10.264	-1.864	8.4
480	10.271	-1.814	8.457
500	10.474	-1.925	8.549

INLET PIPE INVERT
8.937
6.941
6.998
8.399

V -3.7° D; V 3.9° D; V 2.4° D; V -2.7° D

HORIZONTAL SCALE 1:500 (A1) 1:1000 (A3)

10 7.5 5 2.5 0 10 20 30 40 50m

2.4 1.5 1.0 0.5 0 2 4 6 8 10m

VERTICAL SCALE 1:100 (A1) 1:200 (A3)

DO NOT SCALE USE ONLY THE DIMENSIONS PROVIDED.

OUTLET WATER MAIN INVERT LEVEL LONGITUDINAL SECTION

INLET WATER MAIN INVERT LEVELS SIMILAR

HORIZONTAL SCALE 1:500 (A1) 1:1000 (A3)

VERTICAL SCALE 1:100 (A1) 1:200 (A3)

No.	Amendments	Drawn	Design	Appd	Registered Engineer	Reg No.	Date
A	ISSUED FOR TENDER WITH DOUGLAS SHIRE COUNCIL AMENDMENTS	ESS					05/12/16

This drawing cannot be copied or reproduced in any form or used for any purpose other than that originally intended without the written permission of Empower Engineers and Project Managers © COPYRIGHT 2017

DOUGLAS SHIRE COUNCIL

Empower ENGINEERS & PROJECT MANAGERS ABN 23 010 743 692

Client: DOUGLAS SHIRE COUNCIL

Project: PORT DOUGLAS WATER STORAGE AND TRUNK WATER SUPPLY

Title: TRUNK MAIN LONGITUDINAL SECTION (SHEET 2 OF 7)

Datum: AHD PSM 156708 RL 7358 (MGA) COORD

FOR TENDER

Project No. / Drawing No.: B00217-CW003

Rev: A

Plot Date: 23/12/2017 9:28:13 AM

File name: B:\Brisbane - Catalog\JOBS\B0217\Sub\B1217\Plan Douglas Reservoir\4 CIVIL-DRGS\4.2 CURRENT\Preliminary Design\T14636-WAT

User: CHRIS ROBSON

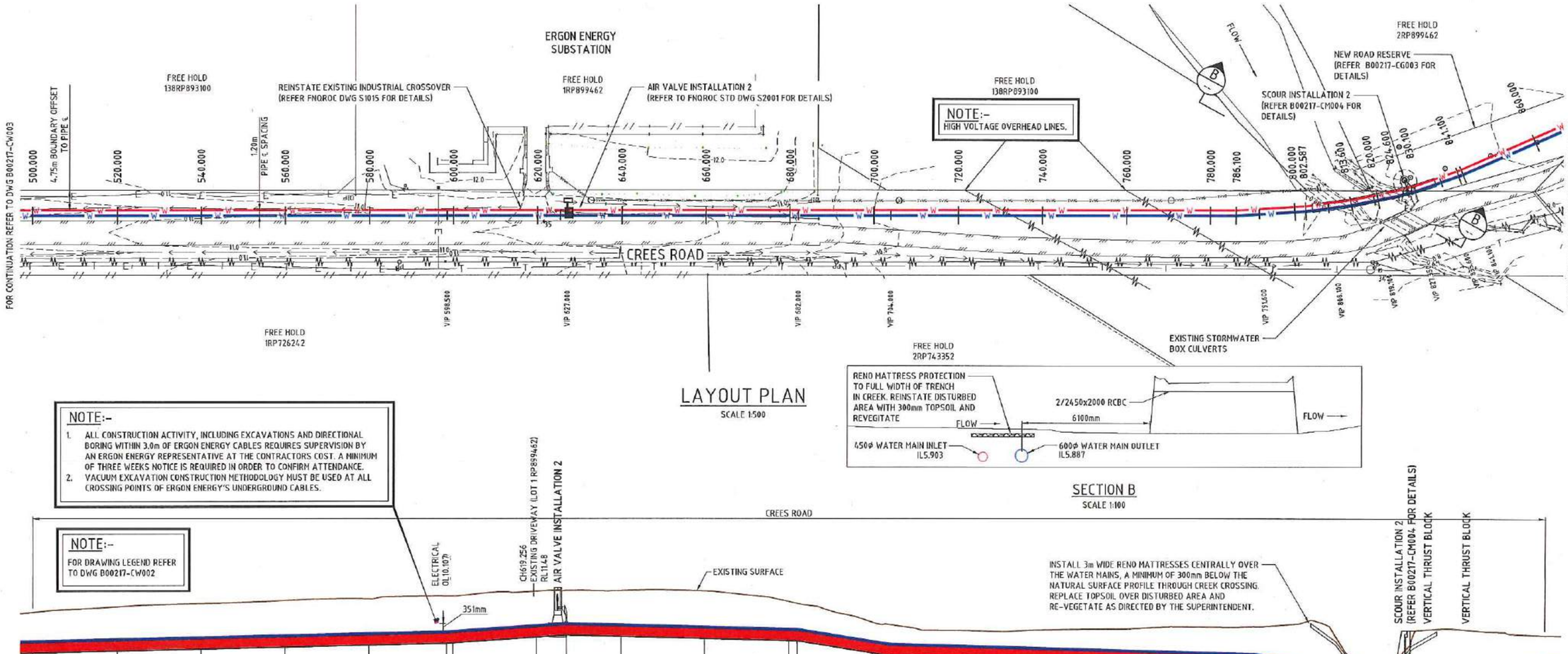

LAYOUT PLAN

SCALE 1:500

SECTION B

SCALE 1:100

NOTE:-

1. ALL CONSTRUCTION ACTIVITY, INCLUDING EXCAVATIONS AND DIRECTIONAL BORING WITHIN 3.0m OF ERGON ENERGY CABLES REQUIRES SUPERVISION BY AN ERGON ENERGY REPRESENTATIVE AT THE CONTRACTORS COST. A MINIMUM OF THREE WEEKS NOTICE IS REQUIRED IN ORDER TO CONFIRM ATTENDANCE.
2. VACUUM EXCAVATION CONSTRUCTION METHODOLOGY MUST BE USED AT ALL CROSSING POINTS OF ERGON ENERGY'S UNDERGROUND CABLES.

NOTE:-

FOR DRAWING LEGEND REFER TO DWG B00217-CW002

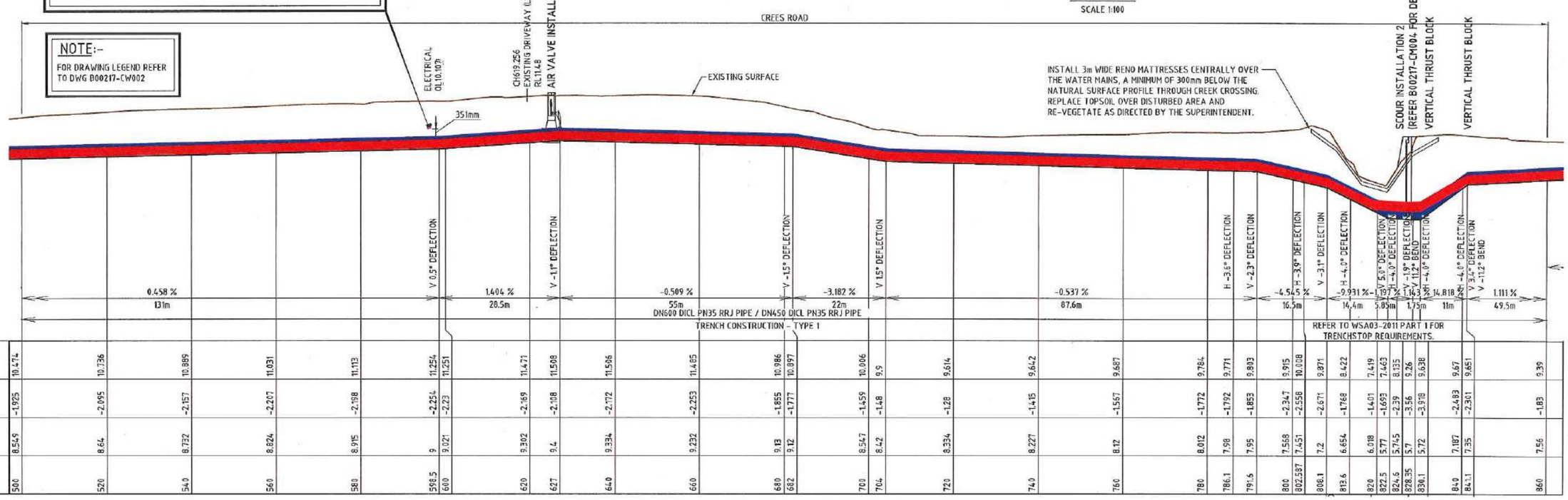

PEGGED CHAINAGE	FINISHED SURFACE	DEPTH TO INVERT	OUTLET PIPE INVERT
500	10.474	-1.925	8.549
520	10.736	-2.095	8.64
540	10.889	-2.157	8.732
560	11.031	-2.207	8.824
580	11.113	-2.198	8.915
598.5	11.254	-2.254	9
600	11.251	-2.23	9.021
620	11.471	-2.169	9.302
627	11.508	-2.108	9.4
640	11.506	-2.172	9.334
660	11.485	-2.253	9.232
680	10.986	-1.855	9.13
682	10.897	-1.777	9.12
700	10.006	-1.459	8.547
704	9.9	-1.48	8.42
720	9.614	-1.28	8.334
740	9.642	-1.415	8.227
760	9.687	-1.557	8.12
786	9.784	-1.772	8.012
786.1	9.771	-1.792	7.98
791.5	9.893	-1.853	7.95
800	9.915	-2.347	7.568
802.587	10.008	-2.558	7.451
808.1	9.871	-2.671	7.2
813.6	8.422	-1.768	6.654
820	7.419	-1.401	6.018
822.5	7.403	-1.693	5.77
824.6	8.135	-2.39	5.745
828.35	9.26	-3.56	5.7
830.1	9.638	-3.978	5.72
840	9.67	-2.483	7.187
841.1	9.651	-2.301	7.35
860	9.39	-1.83	7.56

HORIZONTAL SCALE 1:500 (A1) 1:1000 (A3)

10 7.5 5 2.5 0 10 20 30 40 50m

2.0 1.5 1.0 0.5 0 2 4 6 8 10m

VERTICAL SCALE 1:100 (A1) 1:200 (A3)

DO NOT SCALE USE ONLY THE DIMENSIONS PROVIDED.

OUTLET WATER MAIN INVERT LEVEL LONGITUDINAL SECTION

INLET WATER MAIN INVERT LEVELS SIMILAR

HORIZONTAL SCALE 1:500 (A1) 1:1000 (A3)

VERTICAL SCALE 1:100 (A1) 1:200 (A3)

No.	Amendments	Drawn	Design	Appd	Registered Engineer	Reg No.	Date
A	ISSUED FOR TENDER WITH DOUGLAS SHIRE COUNCIL AMENDMENTS	ESS					05/12/16

This drawing cannot be copied or reproduced in any form or used for any purpose other than that originally intended without the written permission of Empower Engineers and Project Managers © COPYRIGHT 2017

DOUGLAS SHIRE COUNCIL

Empower ENGINEERS & PROJECT MANAGERS ABN 23 010 743 692

Client: DOUGLAS SHIRE COUNCIL

Project: PORT DOUGLAS WATER STORAGE AND TRUNK WATER SUPPLY

Title: TRUNK MAIN LONGITUDINAL SECTION (SHEET 3 OF 7)

Datum: AHD PSM 156708 RL 7358 (MGA) COORD

N

FOR TENDER

Project No. / Drawing No.: B00217-CW004

Rev: A

Plot Date: 21/12/2017 12:15:57 AM
Plot Name: B:\Brisbane - Consulting\B0021\B00217 Port Douglas Reservoir\4. CIVIL DRGS\4.2 CURRENT\Preliminary Design\TW4029-W.DWG
User: DAVIS ROBSON

NOTE:-
FOR DRAWING LEGEND REFER TO DWG B00217-CW002

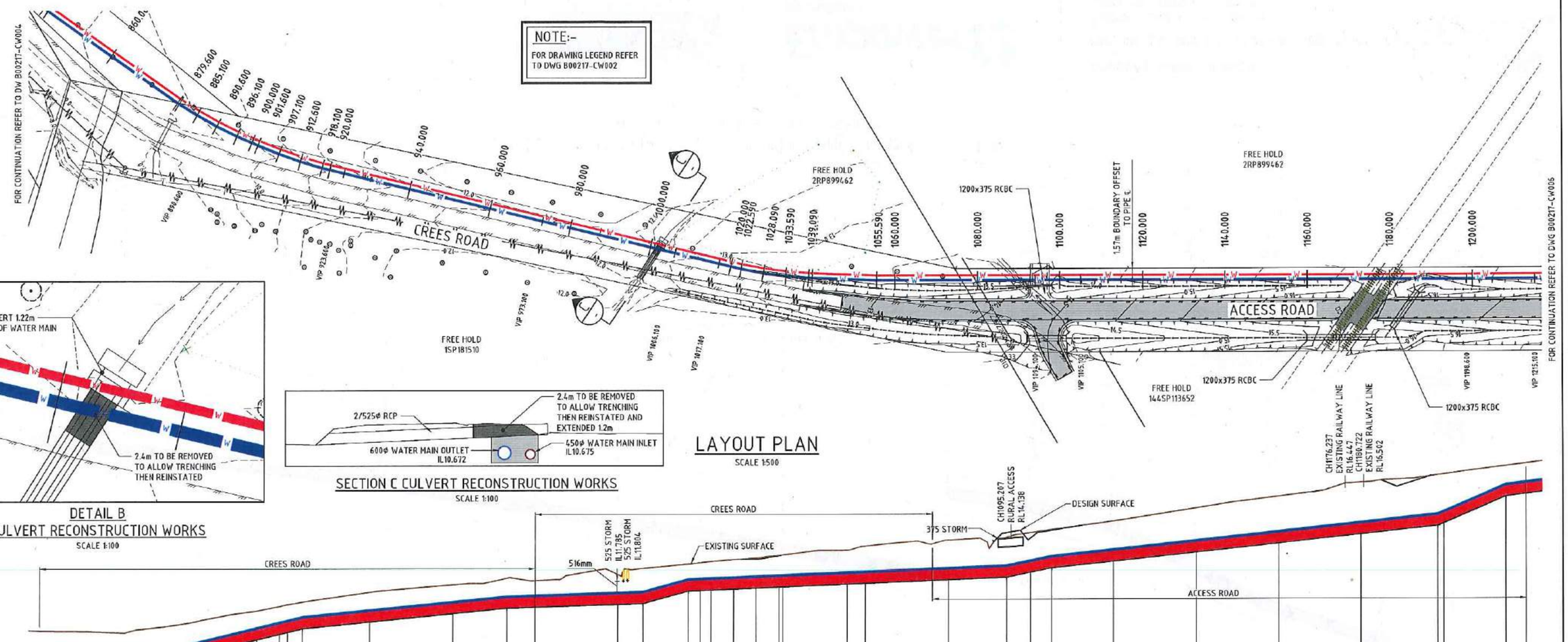

LAYOUT PLAN
SCALE 1:500

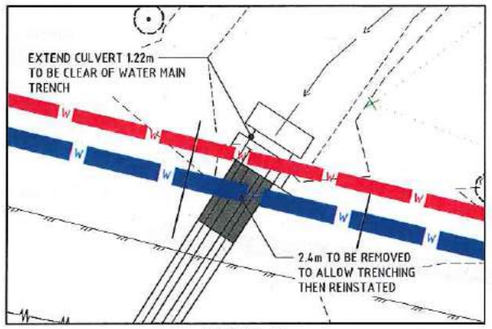

DETAIL B
CULVERT RECONSTRUCTION WORKS
SCALE 1:100

SECTION C CULVERT RECONSTRUCTION WORKS
SCALE 1:100

BENDS/DEFLECTIONS: H -3.0° DEFLECTION; H -3.0° DEFLECTION; H -3.0° DEFLECTION; V 2.7° DEFLECTION; H -3.0° DEFLECTION; H -1.3° DEFLECTION; H -2.0° DEFLECTION; H -3.6° DEFLECTION; H -2.8° DEFLECTION; V -1.6° DEFLECTION; V -0.8° DEFLECTION; V 2.7° DEFLECTION; V -2.6° DEFLECTION; H -3.0° DEFLECTION; H -3.0° DEFLECTION; H -3.0° DEFLECTION; H -2.6° DEFLECTION; H -2.0° DEFLECTION; V 1.9° DEFLECTION; V -1.1° DEFLECTION; V 3.6° DEFLECTION; V -3.4° DEFLECTION

VERTICAL GRADE / DISTANCE: 1.111 % 49.5m; 4.848 % 33m; 1.986 % 49.5m; 0.657 % 33m; 5.455 % 11m; 0.844 % 77m; 4.091 % 11m; 2.139 % 93.5m; 8.485 % 16.5m; 2.489 % 88.4m

REFER TO WSA03-2011 PART 1 FOR TRENCHSTOP REQUIREMENTS.

PIPE DETAILS: DN600 DICL PN35 RRJ PIPE / DN450 DICL PN35 RRJ PIPE
TRENCH CONSTRUCTION - TYPE 1

REFER TO WSA03-2011 PART 1 FOR TRENCHSTOP REQUIREMENTS.

DATUM R.L.0.000

| | | |

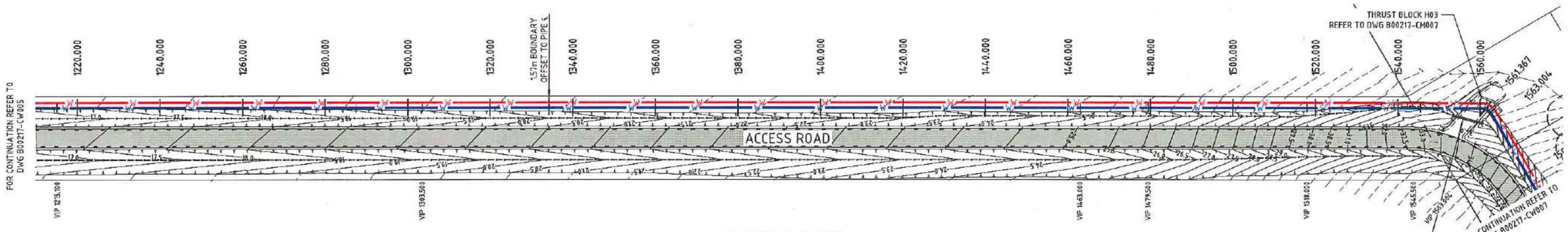

FREE HOLD
144SP113652

LAYOUT PLAN

SCALE 1:500

NOTE:-
FOR DRAWING LEGEND REFER TO DWG B00217-CW002

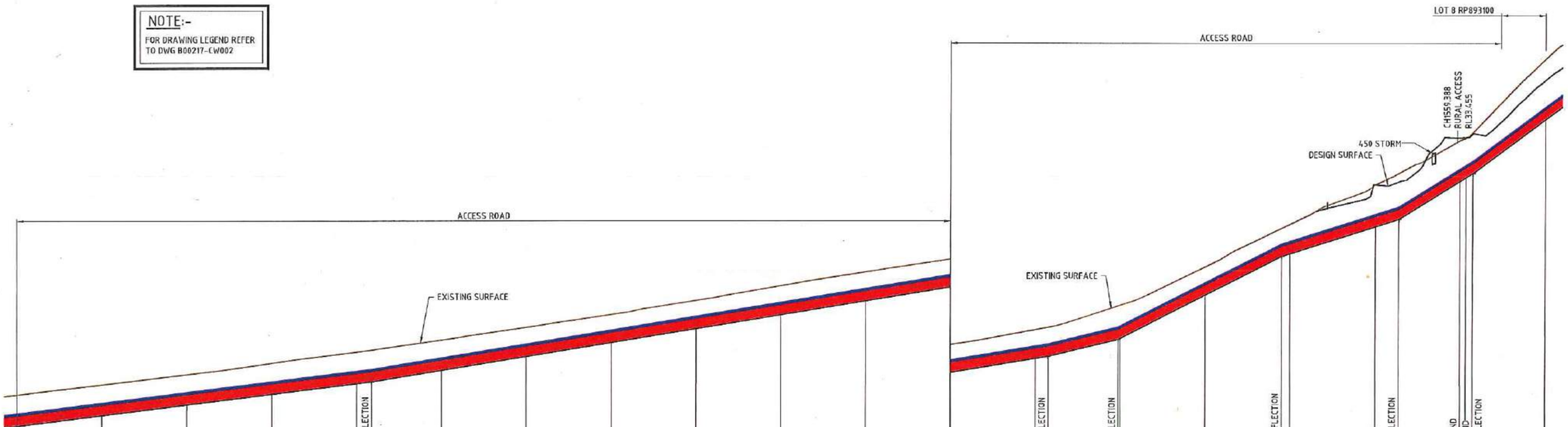

FINISHED SURFACE	17.387	17.853	18.329	18.865	19.388	19.477	19.954	20.553	21.159	21.814	22.512	23.16	23.758	24.456	24.567	25.564	25.596	27.399	29.214	29.406	31.265	31.395	33.461	33.469	33.654	36.165
DEPTH TO INVERT	-1.465	-1.433	-1.412	-1.45	-1.475	-1.477	-1.417	-1.363	-1.317	-1.32	-1.366	-1.362	-1.308	-1.353	-1.367	-1.564	-1.546	-1.322	-1.314	-1.379	-1.973	-1.755	-2.032	-1.871	-1.854	-1.837
OUTLET PIPE INVERT	15.922	16.42	16.917	17.415	17.913	18	18.538	19.19	19.842	20.494	21.146	21.798	22.45	23.102	23.2	24	24.051	26.077	27.9	28.027	29.292	29.64	31.429	31.598	31.8	34.328
PEGGED CHAINAGE	1220	1240	1260	1280	1300	1303.5	1320	1340	1360	1380	1400	1420	1440	1460	1463	1479.5	1480	1500	1518	1520	1540	1545.5	1560	1561.367	1563.004	1580

OUTLET WATER MAIN INVERT LEVEL LONGITUDINAL SECTION

INLET WATER MAIN INVERT LEVELS SIMILAR

HORIZONTAL SCALE 1:500 (A1) 1:1000 (A3)

VERTICAL SCALE 1:100 (A1) 1:200 (A3)

HORIZONTAL SCALE 1:500 (A1) 1:1000 (A3)
VERTICAL SCALE 1:100 (A1) 1:200 (A3)
DO NOT SCALE USE ONLY THE DIMENSIONS PROVIDED.

No.	Amendments	Drawn	Design	Appd	Registered Engineer	Reg No.	Date
A	ISSUED FOR TENDER WITH DOUGLAS SHIRE COUNCIL AMENDMENTS	ESS					05/12/16

This drawing cannot be copied or reproduced in any form or used for any purpose other than that originally intended without the written permission of Empower Engineers and Project Managers © COPYRIGHT 2017

DOUGLAS SHIRE COUNCIL

Empower ENGINEERS & PROJECT MANAGERS ABN 23 010 743 692

Client: DOUGLAS SHIRE COUNCIL

Project: PORT DOUGLAS WATER STORAGE AND TRUNK WATER SUPPLY

Title: TRUNK MAIN LONGITUDINAL SECTION (SHEET 5 OF 7)

Datum: AHD PSM 156708 RL 7358 (MGA) COORD

FOR TENDER

Project No. B00217 Drawing No. CW006 Rev A

Plot Date: 12/12/2017 9:26:12 AM File Name: B:\Brisbane - Consulting\B0\B00217\CW\B00217 Port Douglas Reservoir\L1 CIVIL\B00217-L-2 CURRENT\Preliminary Design\TR\CW-NAT Login: DHOS-HOBSON

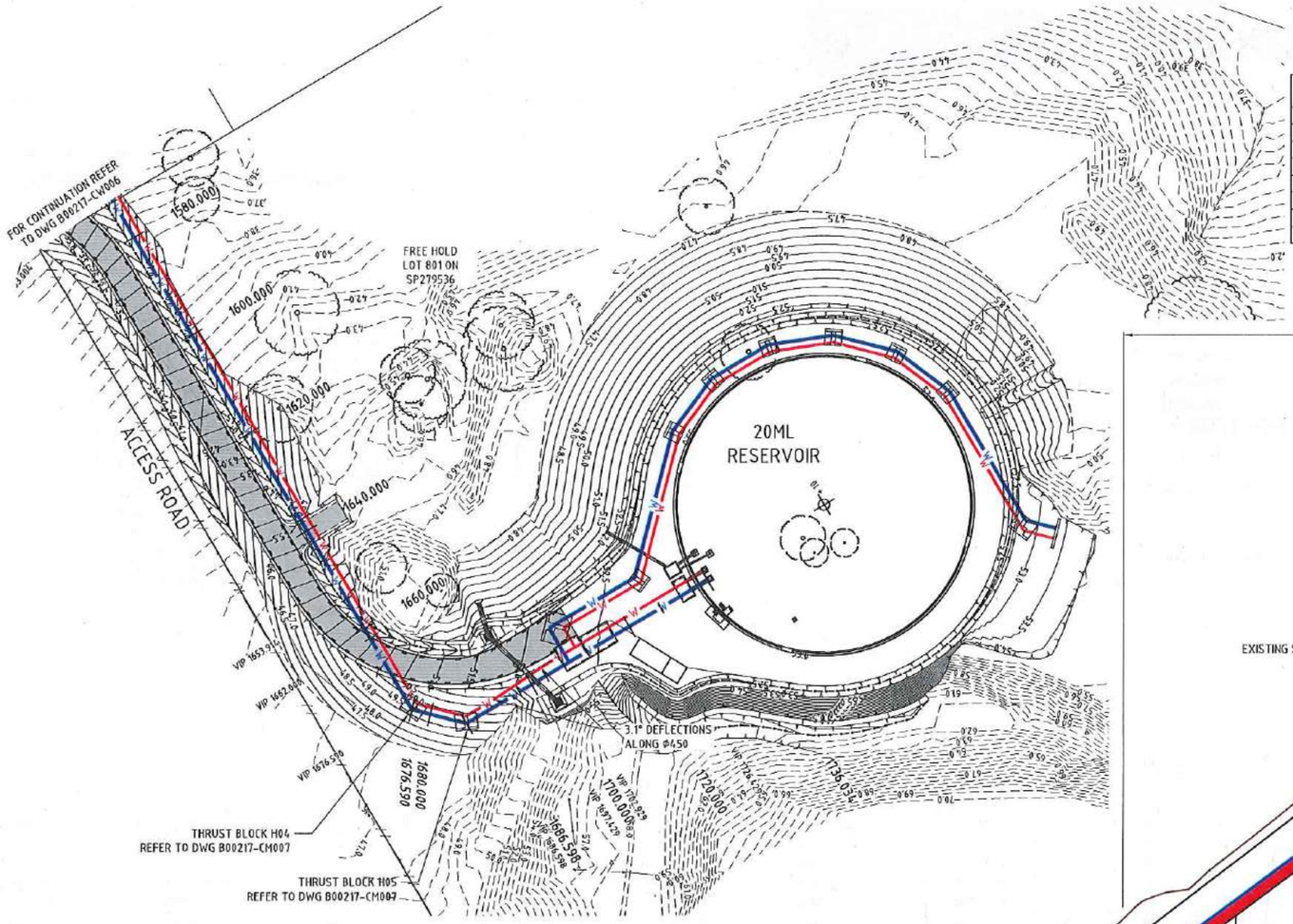

LAYOUT PLAN

SCALE 1:500

SURVEY CONTROL POINTS

NO.	EASTING	NORTHING	ELEVATION	DESCRIPTION
10	334627.349	8171167.794	53.803	IRON PIN 10
16	334628.621	8171265.692	46.960	IRON PIN 16
31	335660.861	8171908.645	9.349	DUMPY 31
32	335601.491	8171752.948	10.544	NAIL IN CONCRETE 32
33	335020.789	8171630.601	13.973	IRON PIN 33
34	335246.000	8171789.965	9.711	IRON PIN 34
35	335444.325	8171759.252	11.599	NAIL IN BITUMEN 35
156708	335648.376	8172176.436	7.358	PSM 156708

SETOUT TABLES

DN600 OUTLET WATER MAIN INVERT

PT	CHAINAGE	EASTING	NORTHING	HEIGHT
IP1	0.000	335718.133	8172150.941	5.170
IP2	77.751	335658.444	8172101.116	5.876
IP3	438.952	335626.042	8171741.371	7.967
IP4	786.100	335280.294	8171772.512	7.980
IP5	802.587	335263.813	8171772.952	7.451
IP6	813.600	335252.809	8171772.497	6.654
IP7	824.600	335241.877	8171771.277	5.745
IP8	830.100	335236.467	8171770.287	5.720
IP9	841.100	335225.811	8171767.558	7.400
IP10	879.600	335189.272	8171755.426	7.789
IP11	885.100	335184.150	8171753.422	7.844
IP12	890.600	335179.140	8171751.153	7.900
IP13	896.100	335174.256	8171748.624	8.167
IP14	901.600	335169.511	8171745.844	8.433

PT	CHAINAGE	EASTING	NORTHING	HEIGHT
IP15	907.100	335164.832	8171742.953	8.700
IP16	912.600	335160.256	8171739.901	8.967
IP17	918.100	335155.877	8171736.573	9.233
IP18	1022.590	335075.890	8171669.340	11.346
IP19	1028.090	335071.871	8171665.586	11.393
IP20	1033.590	335068.054	8171661.626	11.439
IP21	1039.090	335064.449	8171657.472	11.486
IP22	1055.590	335054.203	8171644.539	11.625
IP23	1561.367	334753.852	8171237.599	31.598
IP24	1563.004	334752.256	8171237.237	31.800
IP25	1676.590	334639.234	8171248.543	47.050
IP26	1686.598	334631.488	8171242.207	47.850
IP27	1736.034	334626.567	8171193.015	51.062

NOTE:-
FOR DRAWING LEGEND REFER TO DWG B00217-CW002

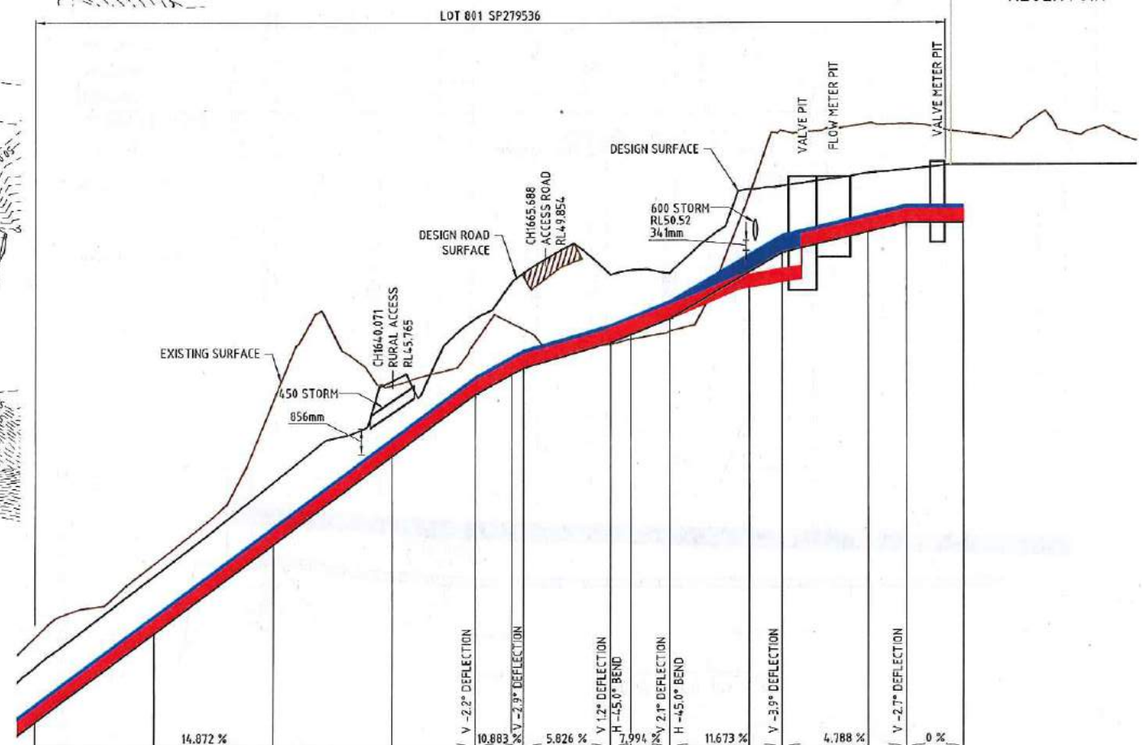

BENDS/DEFLECTIONS: V -2.2° DEFLECTION; V -2.9° DEFLECTION; V 1.2° DEFLECTION; H -45.0° BEND; V 2.1° DEFLECTION; H -45.0° BEND; V -3.9° DEFLECTION; V -2.7° DEFLECTION

VERTICAL GRADE DISTANCE: 14.872 % / 90.91m; 10.883 % / 8.086m; 5.826 % / 14.59m; 7.994 % / 10.008m; 11.673 % / 18.955m; 4.788 % / 20.876m; 0 % / 9.606m

REFER TO WSA03-2011 PART 1 FOR TRENCHSTOP REQUIREMENTS.

PIPE DETAILS: DN600 DICL PN35 RRJ PIPE / DN450 DICL PN35 RRJ PIPE; TRENCH CONSTRUCTION - TYPE 1; TRENCH CONSTRUCTION - TYPE 2; TRENCH CONSTRUCTION - TYPE 1; FL-FL PIPE; TRENCH CONSTRUCTION - TYPE 2

DATUM R.L. 30.000

FINISHED SURFACE	36.165	39.215	42.359	45.758	47.852	49.054	49.374	49.327	49.47	49.376	52.181	52.288	52.711	52.834	53
DEPTH TO INVERT	-1.837	-1.913	-2.083	-2.507	-2.532	-3.071	-3.174	-2.277	-2.147	-1.526	-2.766	-2.225	-1.957	-1.772	-1.938
OUTLET PIPE INVERT	34.328	37.302	40.276	43.251	45.32	45.982	46.2	47.05	47.323	47.85	49.414	50.063	50.754	51.062	51.062
PEGGED CHAINAGE	1580	1600	1620	1640	1653.914	1660	1662	1676.59	1680	1686.598	1700	1705.553	1720	1726.429	1736.034

INLET PIPE INVERT: 46.979 V 1.8° D; 48.837 V -3.2° D; 49.187 V 90° D

VERTICAL GRADE DISTANCE: 8.927 % / 20.811m; 3.3 % / 10.596m

OUTLET WATER MAIN INVERT LEVEL LONGITUDINAL SECTION

INLET WATER MAIN INVERT LEVELS SIMILAR

HORIZONTAL SCALE 1:500 (A1) 1:1000 (A3)

VERTICAL SCALE 1:100 (A1) 1:200 (A3)

HORIZONTAL SCALE 1:500 (A1) 1:1000 (A3)

VERTICAL SCALE 1:100 (A1) 1:200 (A3)

DO NOT SCALE USE ONLY THE DIMENSIONS PROVIDED.

No.	Amendments	Drawn	Design	Appd	Registered Engineer	Reg No.	Date
A	ISSUED FOR TENDER WITH DOUGLAS SHIRE COUNCIL AMENDMENTS	ESS					05/12/16

This drawing cannot be copied or reproduced in any form or used for any purpose other than that originally intended without the written permission of Empower Engineers and Project Managers © COPYRIGHT 2017

DOUGLAS SHIRE COUNCIL

Empower ENGINEERS & PROJECT MANAGERS ABN 23 010 743 692

Client: DOUGLAS SHIRE COUNCIL

Project: PORT DOUGLAS WATER STORAGE AND TRUNK WATER SUPPLY

Title: TRUNK MAIN LONGITUDINAL SECTION (SHEET 6 OF 7)

Datum: AHD PSM 156708 RL 7358 (MGA) COORD

FOR TENDER

Project No. / Drawing No.: B00217-CW007

Rev: A

Plot Date: 21/12/2017 1:27:21 AM File Name: B:\Brisbane - Consulting\285\B0217\3\B0217 Port Douglas Reservoir\4. CIVIL-DRGS\v2 CURRENT\Preliminary Design\T1839-WAT User: CHRIS HIGGINS

SCHEDULE OF PIPES AND FITTINGS
DN450 INLET PIPE

NO.	FITTING	SIZE	TYPE	QUANTITY	QUANTITY BY OTHERS
1	STUB PIPE	DN100 x 0.75m	DICL FL-FL	2	NIL
2	STUB PIPE	DN150 x 0.75m	DICL SP-FL	2	NIL
3	STUB PIPE	DN450 x 1.00m	DICL FL-FL	NIL	1
4	TEE	DN450 TO DN450	DICL SP-FL	2	1
5	TEE	DN450 TO DN300	DICL SO-FL	2	NIL
6	TEE - SCOUR	DN450 TO DN150	DICL SO-FL	2	NIL
7	CONNECTOR	DN300	DICL FL-FL	2	NIL
8	CONNECTOR	DN450	DICL SP-FL	NIL	1
9	CONNECTOR	DN450	DICL SO-FL	1	NIL
10	CONNECTOR	DN450	DICL FL-FL	1	NIL
11	COUPLING	DN450 STRAIGHT	DICL	NIL	2
12	SLUICE VALVE	DN100	DICL FL-FL	2	NIL
13	SLUICE VALVE	DN150	DICL FL-FL	2	NIL
14	SLUICE VALVE	DN450	DICL FL-FL	7	NIL
15	PUDDLE FLANGE	DN100	DICL	2	NIL
16	PUDDLE FLANGE	DN450	DICL	10	1
17	TAPER	DN300-DN100 ECCENTRIC	DICL	2	NIL
18	BEND 90 DEGREE	DN100 DUCKFOOT	DICL FL-FL	2	NIL
19	BEND 90 DEGREE	DN300	DICL FL-FL	2	NIL
20	BEND 11.25 DEGREE	DN450	DICL SO-SO	2	NIL
21	BEND 22.5 DEGREE	DN450	DICL SO-SO	1	NIL
22	BEND 45 DEGREE	DN450	DICL SO-SO	4	NIL
23	BEND 90 DEGREE	DN450	DICL SO-SO	1	NIL
24	BEND 22.5 DEGREE	DN450	DICL FL-FL	6	NIL
25	BEND 45 DEGREE	DN450	DICL FL-FL	2	NIL
26	BEND 90 DEGREE	DN450	DICL FL-FL	5	NIL
27	END CAP	DN450	DICL FL	1	NIL
28	BUTTERFLY VALVE	DN450	DICL FL-FL	1	NIL
29	AIR VALVE	DOUBLE 100NB	DICL FL	2	NIL
30	PIPE	DN450	DICL FL-FL	220m	NIL
31	PIPE	DN450	DICL RRJ	1657m	NIL

SCHEDULE OF PIPES AND FITTINGS
DN600 OUTLET PIPE

NO.	FITTING	SIZE	TYPE	QUANTITY	QUANTITY BY OTHERS
1	STUB PIPE	DN100 x 0.75m	DICL FL-FL	2	NIL
2	STUB PIPE	DN150 x 0.75m	DICL SP-FL	1	NIL
3	STUB PIPE	DN150 x 1.95m	DICL SP-FL	1	NIL
4	STUB PIPE	DN450 x 1.00m	DICL FL-FL	NIL	1
5	TEE	DN450 TO DN450	DICL FL-FL	1	1
6	TEE	DN600 TO DN450	DICL FL-FL	1	NIL
7	TEE	DN600 TO DN300	DICL SO-FL	2	NIL
8	TEE - SCOUR	DN600 TO DN150	DICL SO-FL	2	NIL
9	TEE	DN600 TO DN600	DICL FL-FL	1	NIL
10	CONNECTOR	DN450	DICL SP-FL	NIL	1
11	COUPLING	DN450 STRAIGHT	DICL	NIL	1
12	SLUICE VALVE	DN100	DICL FL-FL	2	NIL
13	SLUICE VALVE	DN150	DICL FL-FL	2	NIL
14	SLUICE VALVE	DN450	DICL FL-FL	2	1
15	SLUICE VALVE	DN600	DICL FL-FL	4	NIL
16	PUDDLE FLANGE	DN150	DICL	2	NIL
17	PUDDLE FLANGE	DN450	DICL	3	1
18	PUDDLE FLANGE	DN600	DICL	7	NIL
19	TAPER	DN300 - DN100 ECCENTRIC	DICL FL-FL	2	NIL
20	TAPER	DN600 - DN450	DICL SO-FL	1	NIL
21	BEND 90 DEGREE	DN100 DUCKFOOT	DICL FL-FL	2	NIL
22	BEND 90 DEGREE	DN300	DICL FL-FL	2	NIL
23	BEND 11.25 DEGREE	DN600	DICL SO-SO	2	NIL
21	BEND 22.5 DEGREE	DN600	DICL SO-SO	1	NIL
22	BEND 45 DEGREE	DN600	DICL SO-SO	4	NIL
23	BEND 90 DEGREE	DN600	DICL SO-SO	1	NIL
24	BEND 22.5 DEGREE	DN600	DICL FL-FL	6	NIL
25	BEND 45 DEGREE	DN600	DICL FL-FL	2	NIL
26	BEND 90 DEGREE	DN600	DICL FL-FL	1	NIL
27	END CAP	DN600	DICL FL	1	NIL
28	FLOW METER	DN600	DICL FL-FL	1	NIL
29	AIR VALVE	DOUBLE 100NB	DICL FL	2	NIL
30	PIPE	DN450	DICL FL-FL	51m	NIL
31	PIPE	DN600	DICL FL-FL	171m	NIL
30	PIPE	DN600	DICL RRJ	1657m	NIL

TABLE STILL TO BE UPDATED

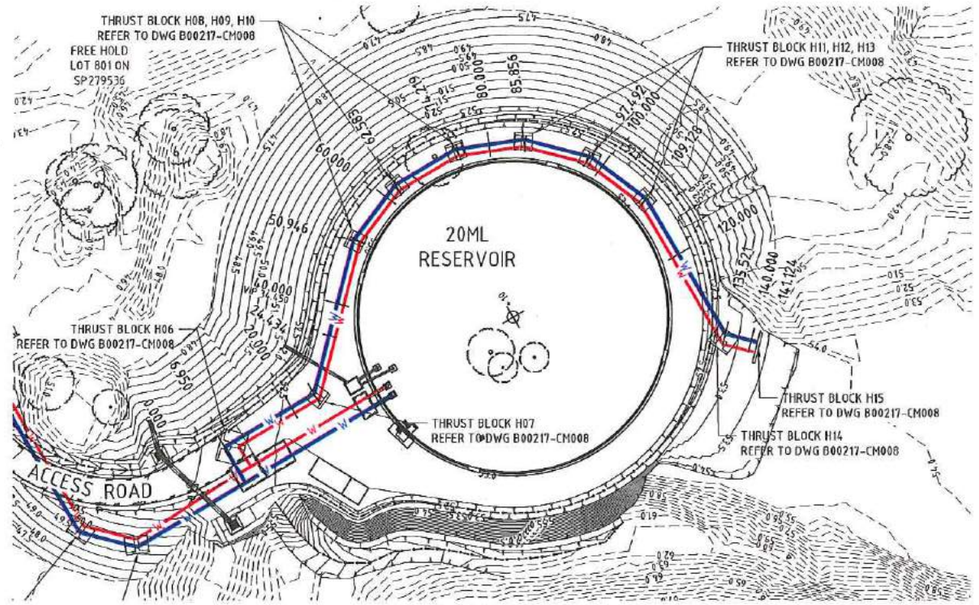

LAYOUT PLAN
SCALE 1:500

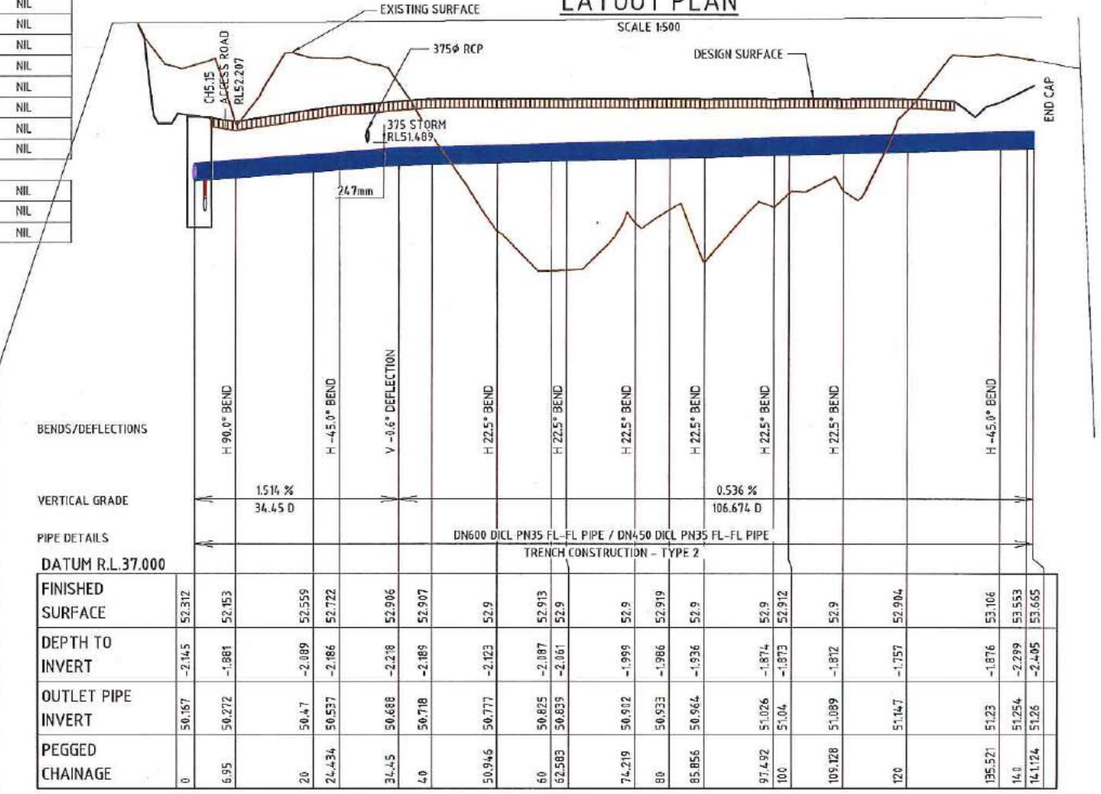

FINISHED SURFACE	52.312	52.153	52.559	52.722	52.906	52.907	52.9	52.913	52.9	52.9	52.919	52.9	52.9	52.912	52.9	52.904	53.106	53.553	53.655
DEPTH TO INVERT	-2.145	-1.881	-2.089	-2.186	-2.278	-2.189	-2.123	-2.087	-2.061	-1.999	-1.986	-1.936	-1.874	-1.873	-1.812	-1.757	-1.876	-2.299	-2.405
OUTLET PIPE INVERT	50.167	50.272	50.47	50.537	50.688	50.718	50.777	50.825	50.839	50.912	50.933	50.964	51.026	51.04	51.089	51.147	51.23	51.254	51.26
PEGGED CHAINAGE	0	6.95	20	24.434	34.45	40	50.946	60	62.583	74.219	80	85.856	97.492	100	109.128	120	135.521	140	141.124

CONNECTION TO FUTURE SECOND RESERVOIR
INLET WATER MAIN INVERT LEVELS SIMILAR

HORIZONTAL SCALE 1:500 (A1) 1:1000 (A3)
VERTICAL SCALE 1:100 (A1) 1:200 (A3)

SETOUT TABLE
DN600 OUTLET WATER MAIN INVERT
(TO FUTURE RESERVOIR)

PT	CHAINAGE	EASTING	NORTHING	HEIGHT
IP1	0.000	334629.384	8171221.179	50.167
IP2	6.950	334636.300	8171220.487	50.272
IP3	24.434	334634.559	8171203.090	50.537
IP4	50.946	334651.347	8171182.570	50.777
IP5	62.583	334654.708	8171171.429	50.839
IP6	74.219	334653.549	8171159.851	50.902
IP7	85.856	334648.048	8171149.597	50.964
IP8	97.492	334639.042	8171142.229	51.026
IP9	109.128	334627.901	8171138.868	51.089
IP10	135.521	334601.639	8171141.496	51.230
IP11	141.124	334597.302	8171137.948	51.260

NOTE:-
FOR DRAWING LEGEND REFER TO DWG B00217-CW002

HORIZONTAL SCALE 1:500 (A1) 1:1000 (A3)
10 7.5 5 2.5 0 10 20 30 40 50m
2.0 1.5 1.0 0.5 0 2 4 6 8 10m
VERTICAL SCALE 1:100 (A1) 1:200 (A3)
DO NOT SCALE USE ONLY THE DIMENSIONS PROVIDED

No.	Amendments	Drawn	Design	Appd	Registered Engineer	Reg No.	Date
A	ISSUED FOR TENDER WITH DOUGLAS SHIRE COUNCIL AMENDMENTS	ESS					05/12/16

This drawing cannot be copied or reproduced in any form or used for any purpose other than that originally intended without the written permission of Empower Engineers and Project Managers © COPYRIGHT 2017

DOUGLAS SHIRE COUNCIL

Empower ENGINEERS & PROJECT MANAGERS ABN 23 010 743 692

Client: DOUGLAS SHIRE COUNCIL
Project: PORT DOUGLAS WATER STORAGE AND TRUNK WATER SUPPLY
Title: TRUNK MAIN LONGITUDINAL SECTION (SHEET 7 OF 7)

Datum: AHD, PSM 156708, RL 7358 (MGA) COORD

FOR TENDER

Project No. / Drawing No.: B00217-CW008
Rev: A

Plot Date: 29/12/2017 9:28:30 AM User: CHRIS HOBSON File Name: B:\Bespoke - Consulting\DBSM\B0217\B00217 Port Douglas Reservoir\A1 CIVIL\B00217-CW008 Preliminary Design.DWG

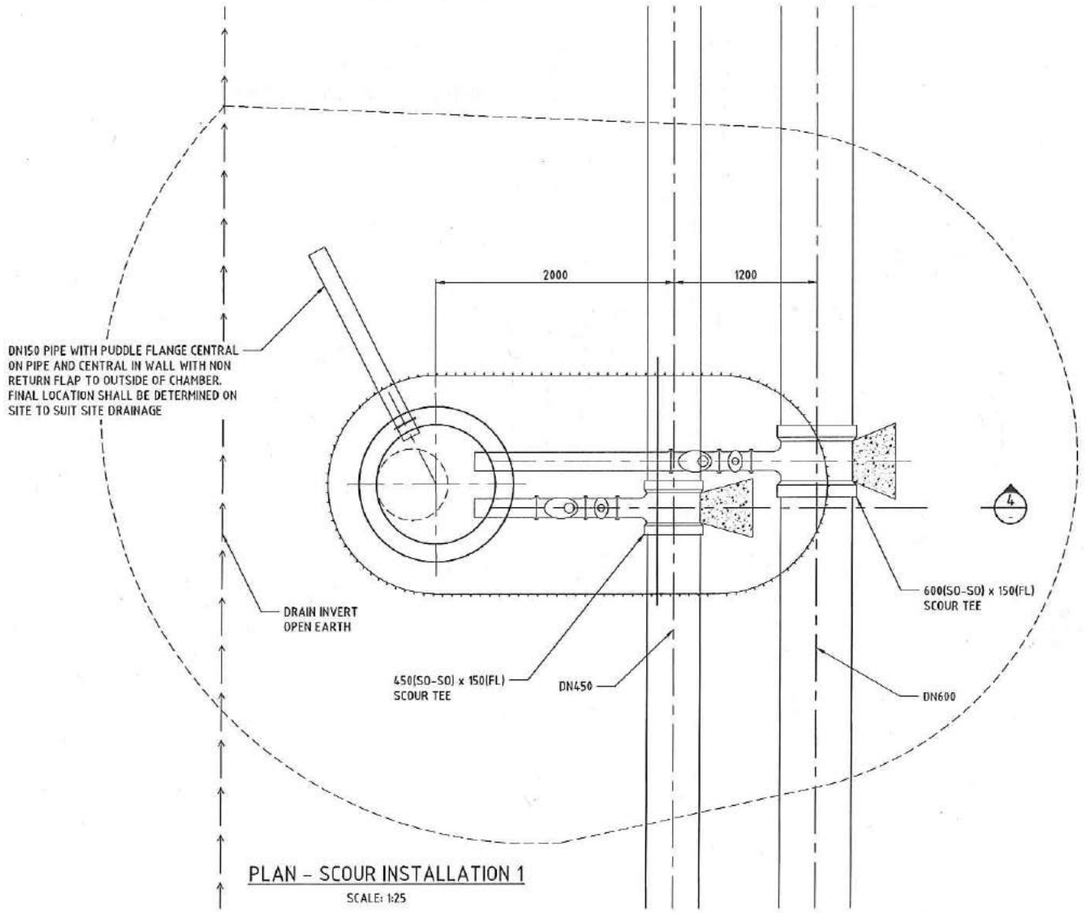

PLAN – SCOUR INSTALLATION 1

SCALE: 1:25

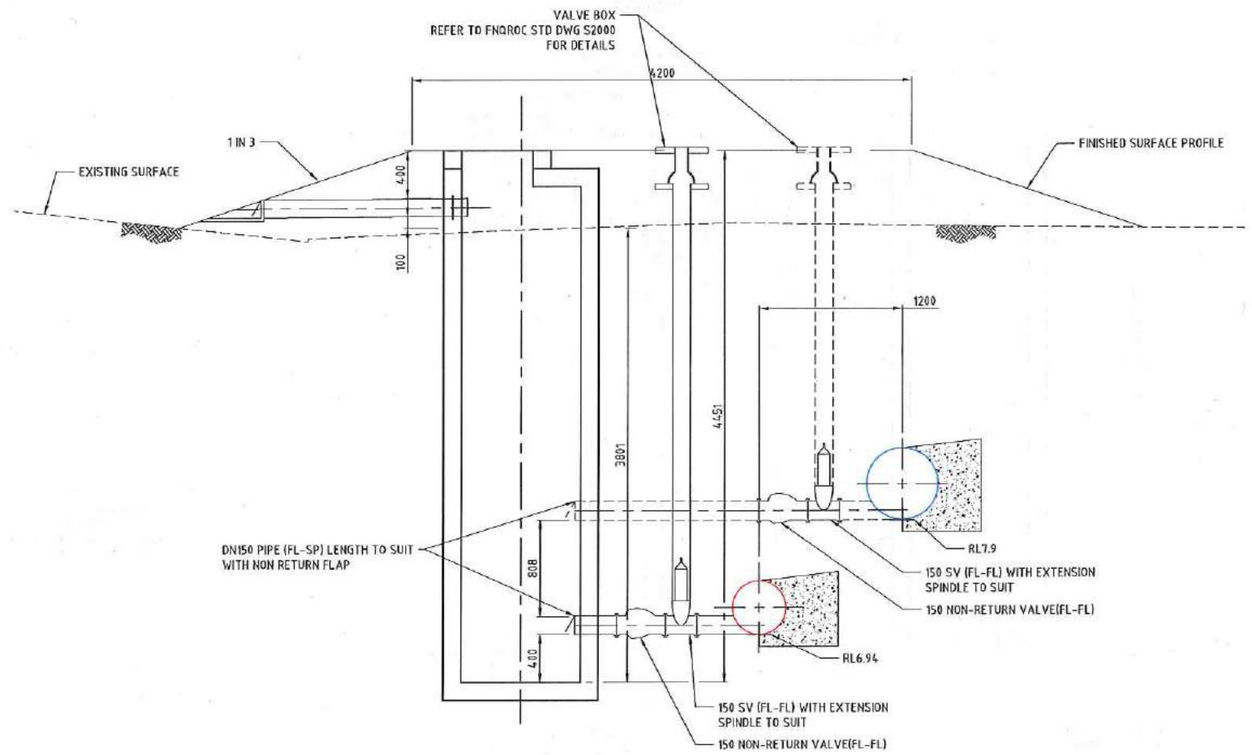

SECTION 4

SCALE: 1:25

0 0.4 0.8 1.2 1.6 2.0m
0.4 0.3 0.2 0.1

SCALE 1:20 (A1) 1:40 (A3)

DO NOT SCALE USE ONLY THE DIMENSIONS PROVIDED.

0 0.5 1.0 1.5 2.0 2.5m
0.5 0.25

SCALE 1:25 (A1) 1:50 (A3)

DO NOT SCALE USE ONLY THE DIMENSIONS PROVIDED.

NOTE:-

PROVIDE MARKER POSTS IN ACCORDANCE WITH FNQROC STD DWGS S2010 AND S2011

No.	Amendments	Drawn	Design	Appd	Registered Engineer	Reg No.	Date
A	ISSUED FOR TENDER WITH DOUGLAS SHIRE COUNCIL AMENDMENTS	ESS					05/12/16

This drawing cannot be copied or reproduced in any form or used for any purpose other than that originally intended without the written permission of Empower Engineers and Project Managers © COPYRIGHT 2017

DOUGLAS SHIRE COUNCIL

Empower ENGINEERS & PROJECT MANAGERS ABN 23 010 743 692

Client: DOUGLAS SHIRE COUNCIL

Project: PORT DOUGLAS WATER STORAGE AND TRUNK WATER SUPPLY

Title: WATER MAIN DETAILS (SHEET 1 OF 4)
SCOUR INSTALLATION 1
CHAINAGE 434

Datum: AHD
PSM 156708
RL 7358
(MGA) COORD

FOR TENDER

Project No. B00217 Drawing No. CM003 Rev A

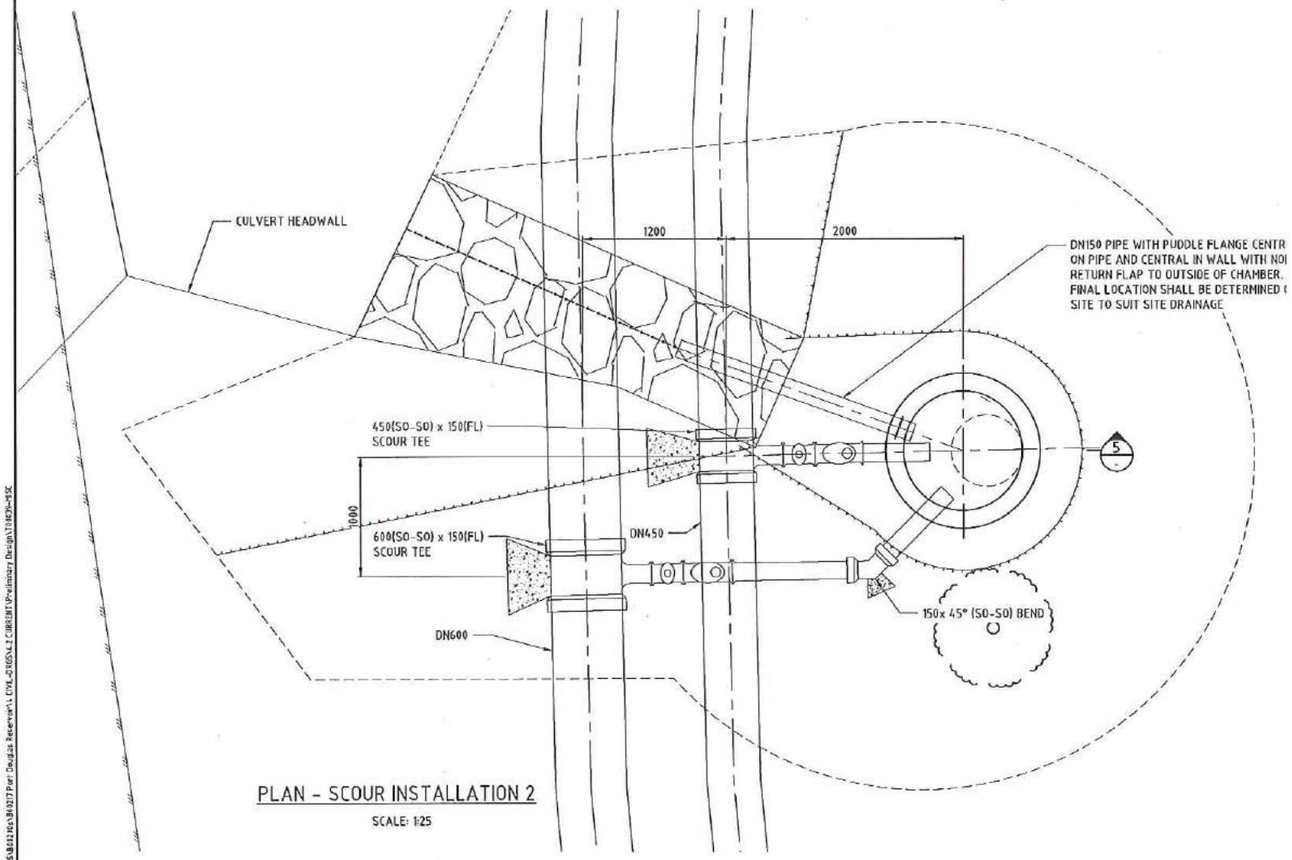

PLAN - SCOUR INSTALLATION 2

SCALE: 1:25

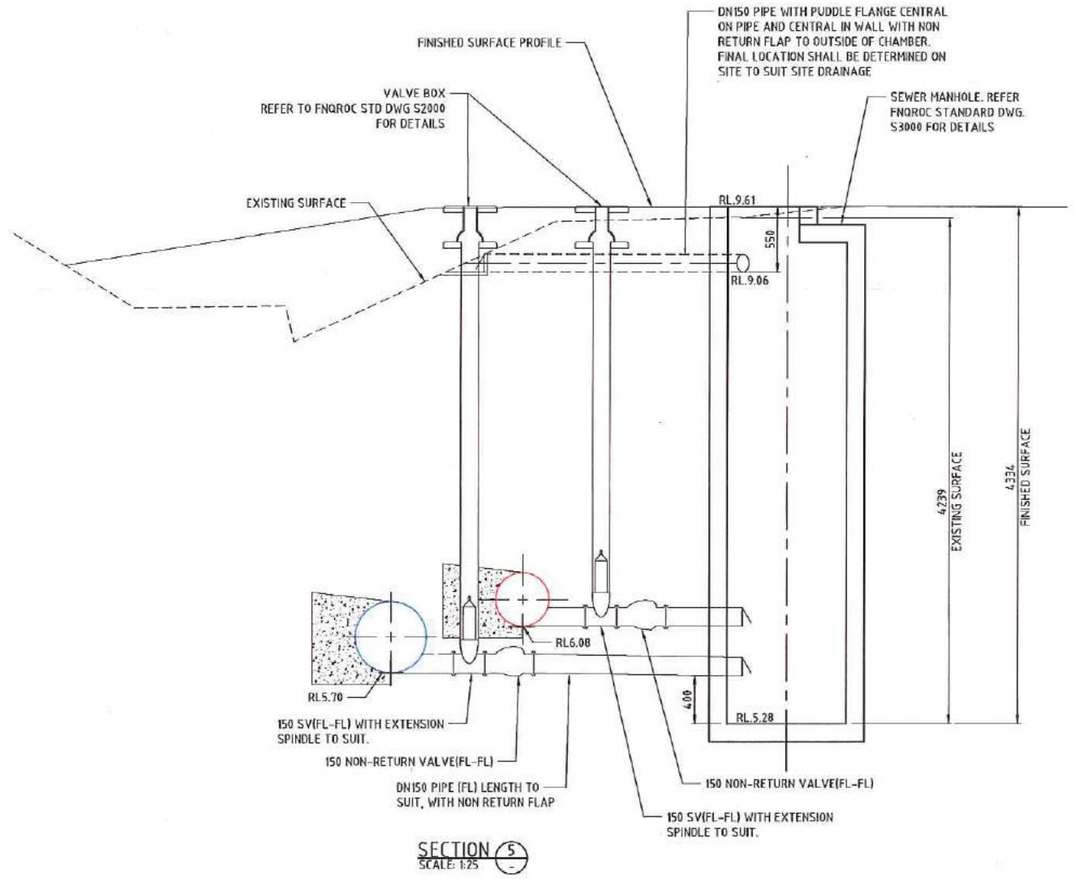

SECTION 5
SCALE: 1:25

NOTE:-
PROVIDE MARK POSTS IN ACCORDANCE WITH FNQROC S2010 AND S2011

0 0.5 1.0 1.5 2.0 2.5m
0.5 0.25

SCALE 1:25 (A1) 1:50 (A3)
DO NOT SCALE USE ONLY THE DIMENSIONS PROVIDED

No.	Amendments	Drawn	Design	Appd	Registered Engineer	Reg No.	Date
A	ISSUED FOR TENDER WITH DOUGLAS SHIRE COUNCIL AMENDMENTS	ESS					05/12/16

This drawing cannot be copied or reproduced in any form or used for any purpose other than that originally intended without the written permission of Empower Engineers and Project Managers © COPYRIGHT 2017

DOUGLAS SHIRE COUNCIL

Empower ENGINEERS & PROJECT MANAGERS ABN 23 010 743 692

Client: DOUGLAS SHIRE COUNCIL

Project: PORT DOUGLAS WATER STORAGE AND TRUNK WATER SUPPLY

Title: WATER MAIN DETAILS (SHEET 2 OF 4)
SCOUR INSTALLATION 2
CHAINAGE 828

Datum: AHD
PSM 156708
RL 7358
(MGA) COORD

FOR TENDER

Project No. B00217 Drawing No. CM004 Rev A

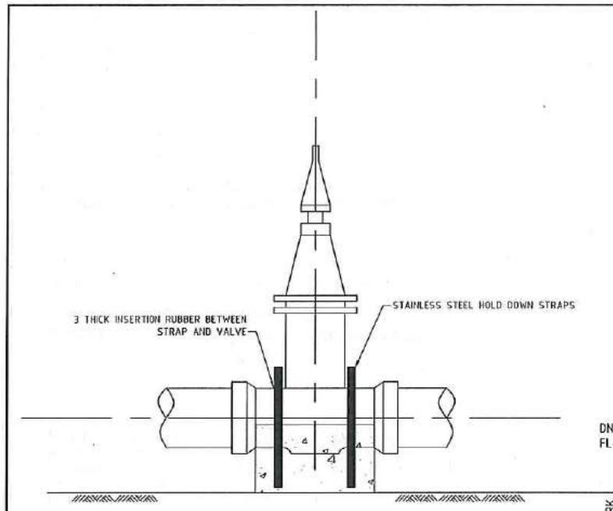

ANCHORED VALVES

N.T.S.

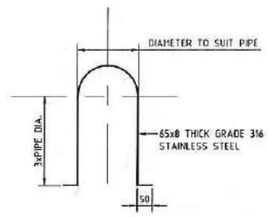

TYPICAL SS STRAP

N.T.S.

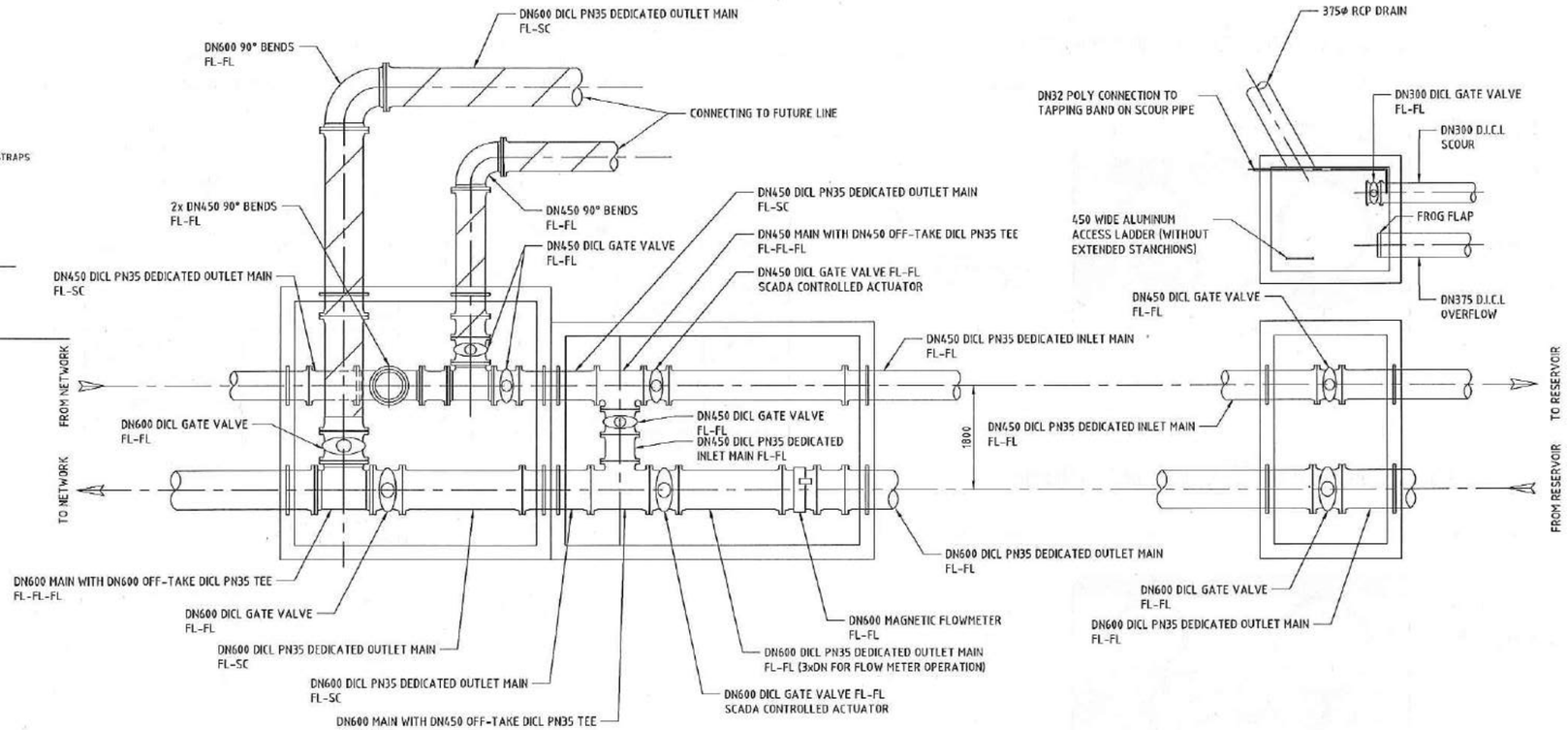

INLET/OUTLET PIT DETAILS

SCALE 1:50

NOTE:-
FOR PIT AND LID STRUCTURAL DETAILS REFER GLEN TUCKER DRAWINGS

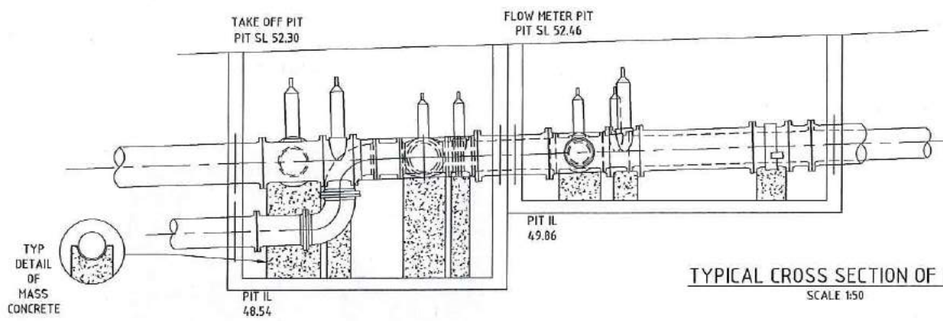

TYPICAL CROSS SECTION OF PITS

SCALE 1:50

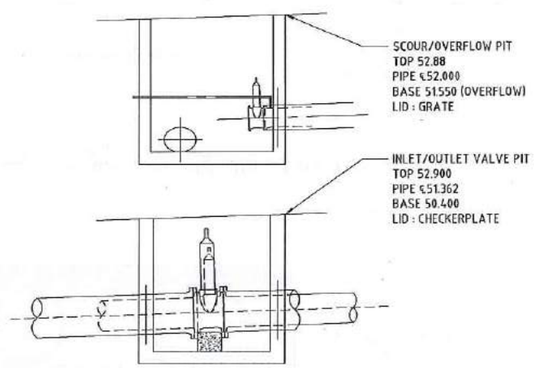

0 1 2 3 4 5m

SCALE 1:50 (A1) 1:100 (A3)
DO NOT SCALE USE ONLY THE DIMENSIONS PROVIDED

No.	Amendments	Drawn	Design	Appd	Registered Engineer	Reg No.	Date
A	ISSUED FOR TENDER WITH DOUGLAS SHIRE COUNCIL AMENDMENTS	ESS					05/12/16

This drawing cannot be copied or reproduced in any form or used for any purpose other than that originally intended without the written permission of Empower Engineers and Project Managers © COPYRIGHT 2017

DOUGLAS SHIRE COUNCIL

Empower ENGINEERS & PROJECT MANAGERS ABN 23 010 743 692

Client: DOUGLAS SHIRE COUNCIL

Project: PORT DOUGLAS WATER STORAGE AND TRUNK WATER SUPPLY

Title: WATER MAIN DETAILS (SHEET 3 OF 4) RESERVOIR CONNECTION

Datum: AHD PSM 156708 RL 7358 (MGA) COORD

FOR TENDER

Project No. B00217 Drawing No. CM005 Rev A

Plot Date: 20/12/2017 4:29:54 AM User: CHRIS HOBSON File Name: B:\Brisbane - Consulting\JOBS\B0217 Port Douglas Reservoir\CIVIL-CIVIL\2 CURRENT\Preliminary Design\18039-PSK

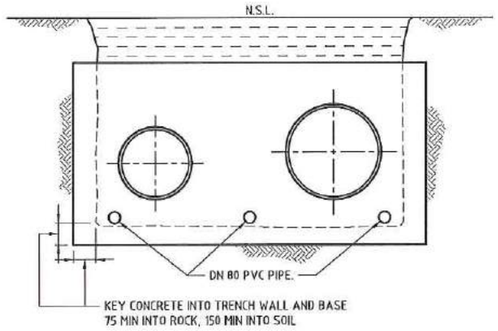

SECTION X
SCALE 1:20

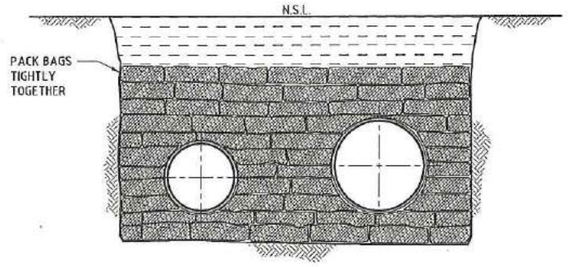

SECTION Y
SCALE 1:20

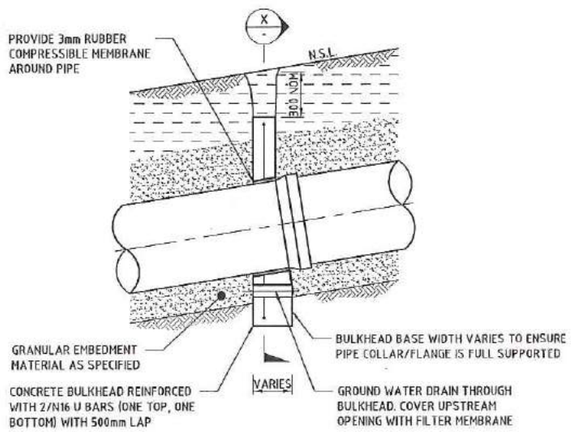

CONCRETE BULKHEAD DETAIL
SCALE 1:20

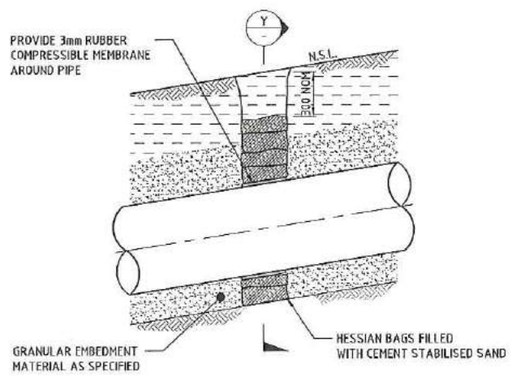

TRENCH STOP DETAIL
SCALE 1:20

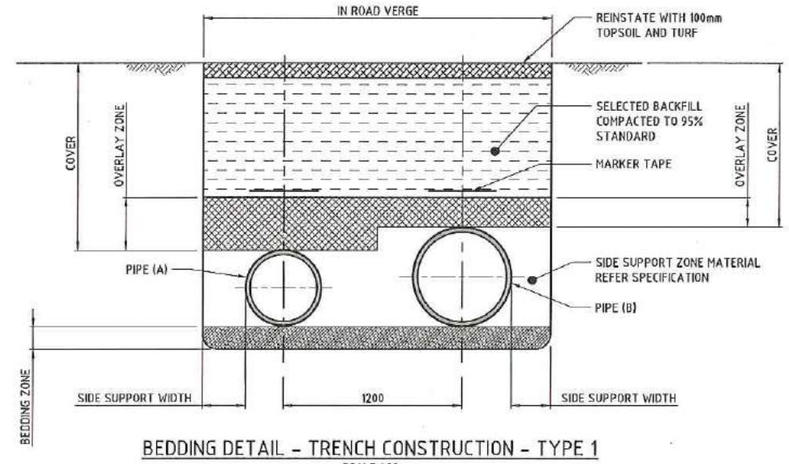

BEDDING DETAIL - TRENCH CONSTRUCTION - TYPE 1
SCALE 1:20

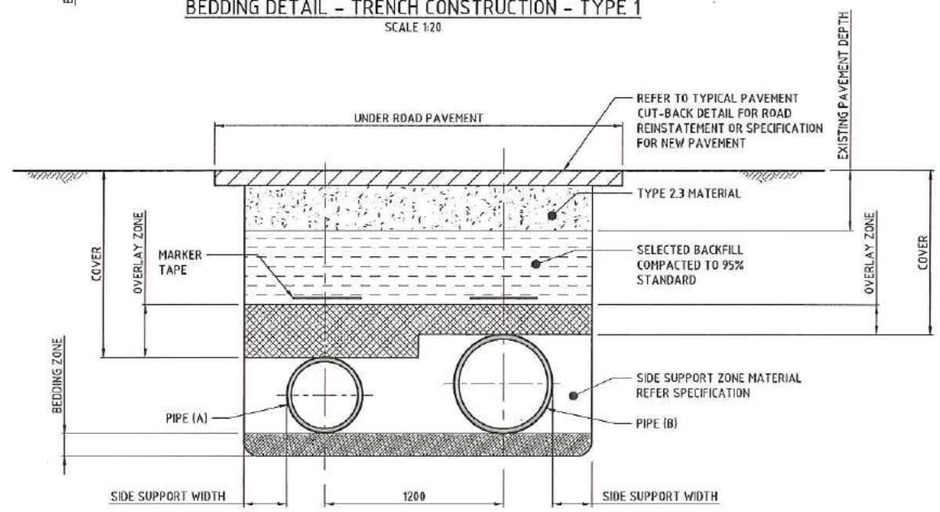

BEDDING DETAIL - TRENCH CONSTRUCTION - TYPE 2
SCALE 1:20

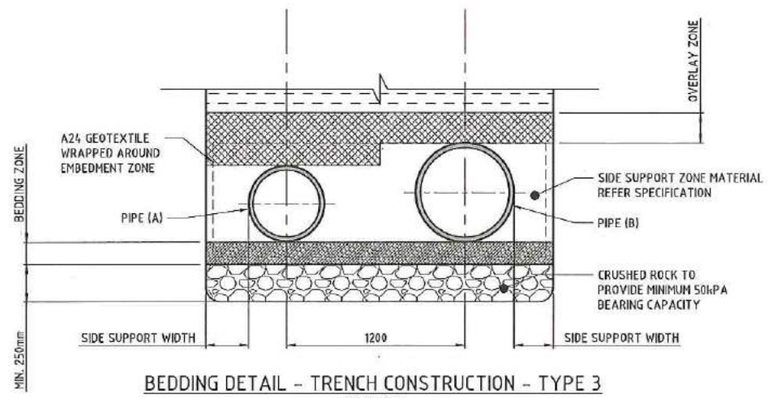

BEDDING DETAIL - TRENCH CONSTRUCTION - TYPE 3
SCALE 1:20

	MINIMUM DIMENSIONS		
	SIDE SUPPORT WIDTH	BEDDING ZONE	OVERLAY ZONE
≤ 150mm	100mm	100mm	150mm
> 150mm and ≤ 300mm	150mm	100mm	150mm
> 300mm and ≤ 450mm	200mm	100mm	150mm
> 450mm and ≤ 900mm	300mm	150mm	150mm
REFERENCE: AS/NZS 2566.1:1998 - FIGURE 3.1 EMBEDMENT GEOMETRY			

WATER PIPELINE LOCATION	MIN. PIPE COVER
UNDER UNKERBED ROADS	900mm
UNDER KERBED ROADS	800mm
IN ROAD VERGES	600mm
REFERENCE: AS/NZS 2566.1:1998 - TABLE 3.1 MINIMUM COVER	

CLEARANCE TO SERVICES	HORIZONTAL	VERTICAL
WATER MAINS < DN375	600mm	150mm
WATER MAINS > DN375	600mm	500mm
SEWER MAINS	1000mm	500mm
STORMWATER LINES	600mm	150mm
TELSTRA CONDUITS	600mm	150mm
ERGON ENERGY CONDUITS	1000mm	300mm (NOTE 1)
REFERENCE: WSA 03 2002 - TABLE 4.1 CLEARANCES		

NOTES

1. VERTICAL CLEARANCE TO ERGON ENERGY CONDUITS HAS BEEN INCREASED TO MATCH LOCAL REQUIREMENTS.
2. MARKER TAPE SHALL BE INSTALLED 300mm ABOVE EACH PIPELINE IN ACCORDANCE WITH AS/NZS 2648.1.
3. TYPE 3 BEDDING SHALL BE USED IN WET CONDITIONS WHERE THE FOUNDATION MATERIAL IS UNSUITABLE.

MAXIMUM ALLOWABLE JOINT DEFLECTION FOR TYTON FITTINGS

NOMINAL SIZE DN	ALLOWABLE JOINT DEFLECTION
450 - 750	3°

MAXIMUM ALLOWABLE JOINT DEFLECTION FOR TYTON PIPES

NOMINAL SIZE DN	ALLOWABLE JOINT DEFLECTION	LATERAL OFFSET PER METER OF PIPE BARREL MM	OFFSET PER 5.5M LENGTHS OF MM	RADIUS OF 5.5M LENGTHS M
375 - 600	4°	70	385	73

0 0.4 0.8 1.2 1.6 2.0m
0.2 0.3 0.2 0.1
SCALE 1:20 (A1) 1:40 (A3)
DO NOT SCALE USE ONLY THE DIMENSIONS PROVIDED.

No.	Amendments	Drawn	Design	Appd	Registered Engineer	Reg No.	Date
A	ISSUED FOR TENDER WITH DOUGLAS SHIRE COUNCIL AMENDMENTS	ESS					05/12/16

This drawing cannot be copied or reproduced in any form or used for any purpose other than that originally intended without the written permission of Empower Engineers and Project Managers © COPYRIGHT 2017

DOUGLAS SHIRE COUNCIL

Empower ENGINEERS & PROJECT MANAGERS ABN 23 010 743 692

Client: DOUGLAS SHIRE COUNCIL

Project: PORT DOUGLAS WATER STORAGE AND TRUNK WATER SUPPLY

Title: WATER MAIN DETAILS (SHEET 4 OF 4) TRENCH CONSTRUCTION TYPES

Datum: AHD
PSM 156706
RL 7358
(MGA) COORD

N

FOR TENDER

Project No. B00217-CM006 | Drawing No. | Rev A

Plot Date: 21/12/2017 1:30:49 AM
User: CHRIS HIBBIN File Name: B:\Hibbins - Consulting\JOBS\B0021\CAD\B00217 Port Douglas Reservoir\L CIVIL-DRGS\L-2 CURRENT\Preliminary Design\T1M2D-4.DWG

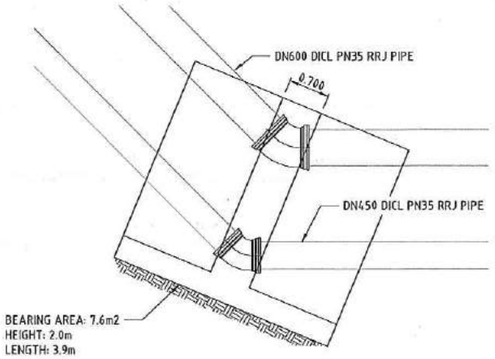

THRUST BLOCK H01
BEND D 45° - CHAINAGE 77.751
SCALE 1:50

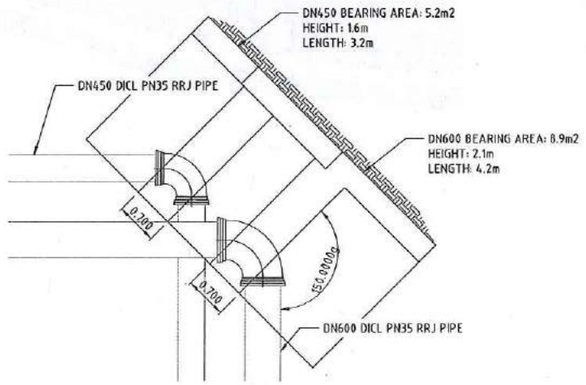

THRUST BLOCK H02
BEND E 90° - CHAINAGE 438.952
SCALE 1:50

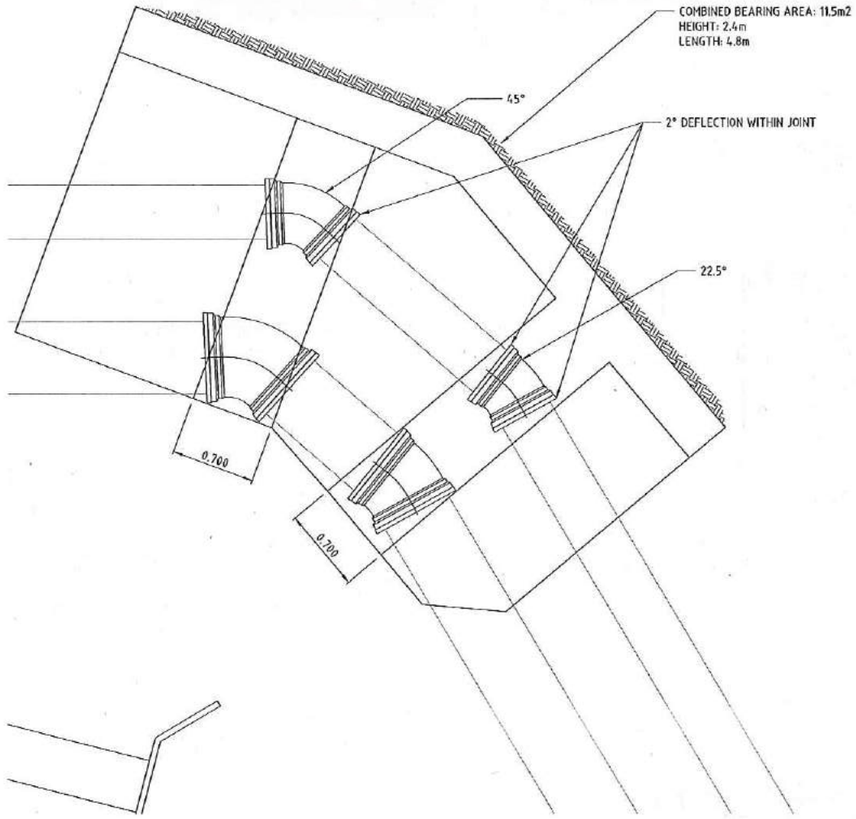

THRUST BLOCK H03
BEND B 22.5° AND BEND D 45° - CHAINAGE 1554.388 AND 1556.025
SCALE 1:25

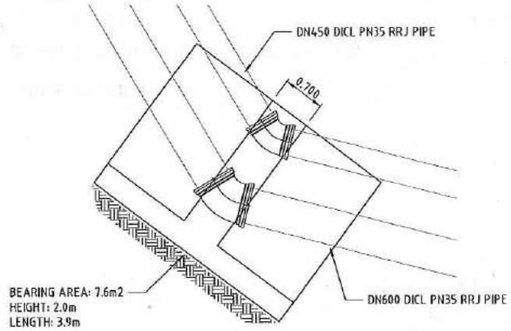

THRUST BLOCK H04
BEND D 45° - CHAINAGE 1607.176
SCALE 1:50

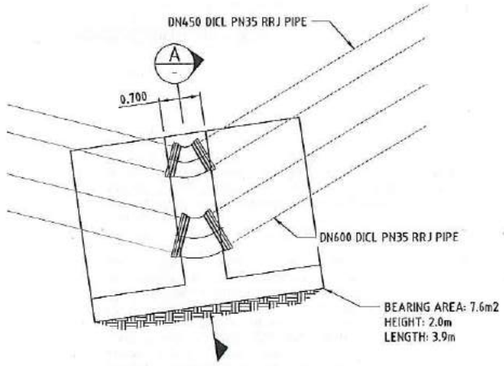

THRUST BLOCK H05
BEND D 45° - CHAINAGE 1685.669
SCALE 1:50

TRUNK INLET AND OUTLET WATER MAINS - HORIZONTAL THRUST BLOCKS				
BEND DESCRIPTION	PIPE SIZE	BEND ANGLE (DEGREES)	SOIL BEARING CAPACITY (KPA)	MIN. BEARING AREA (M2)
B	DN450 AND DN600	22.5	100	3.9
D	DN450 AND DN600	45	100	7.6
E	DN450 AND DN600	90	100	14.0
B + D	DN450 AND DN600	22.5 AND 45	100	11.5

TRUNK INLET AND OUTLET WATER MAINS -.VERTICAL THRUST BLOCKS			
PIPE SIZE	BEND ANGLE (DEGREES)	RESULTANT THRUST (KN)	CONCRETE VOLUME (M3)
DN450	11.25	47	2.0
DN600	11.25	82	3.4

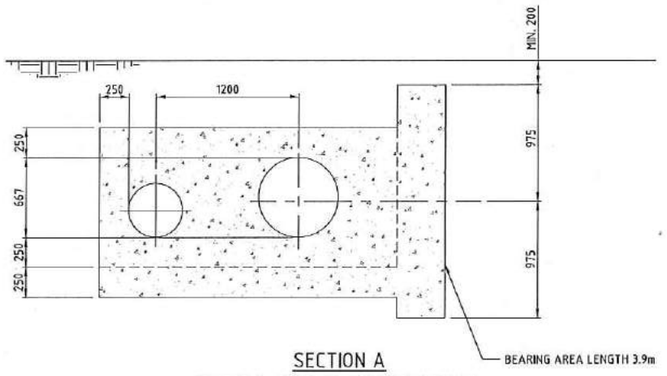

SECTION A
TYPICAL THRUST BLOCK DETAIL
SCALE 1:25

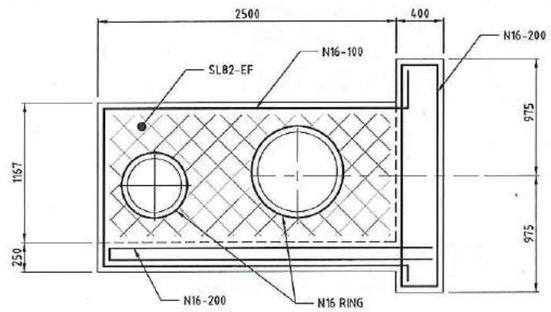

SECTION A
TYPICAL THRUST BLOCK REINFORCING
SCALE 1:25

0 0.5 1.0 1.5 2.0 2.5m
0.5 0.25
SCALE 1:25 (A1) 1:50 (A3)
DO NOT SCALE USE ONLY THE DIMENSIONS PROVIDED.

0 1 2 3 4 5m
1.0 0.75 0.50 0.25
SCALE 1:50 (A1) 1:100 (A3)
DO NOT SCALE USE ONLY THE DIMENSIONS PROVIDED.

No.	Amendments	Drawn	Design	Appd	Registered Engineer	Reg No.	Date
A	ISSUED FOR TENDER WITH DOUGLAS SHIRE COUNCIL AMENDMENTS	ESS					05/12/16

This drawing cannot be copied or reproduced in any form or used for any purpose other than that originally intended without the written permission of Empower Engineers and Project Managers ©COPYRIGHT 2017

DOUGLAS SHIRE COUNCIL

Empower ENGINEERS & PROJECT MANAGERS ABN 23 010 743 692

Client: DOUGLAS SHIRE COUNCIL

Project: PORT DOUGLAS WATER STORAGE AND TRUNK WATER SUPPLY

Title: THRUST BLOCK DETAILS
20ML RESERVOIR LINES

Datum: AHD
PSM 156708
RL 7358
(MGA) COORD

FOR TENDER

Project No. B00217 Drawing No. CM007 Rev A

Plot Date: 21/12/2017 9:38:33 AM User: CHRIS MOSSON File Name: B:\Archive - Consulting\JOBS\B0021x\B0217 Port Douglas Reservoir\1. CIVIL\2.DESIGN\2. CURRENT\Preliminary Design\TB\PS-MSC

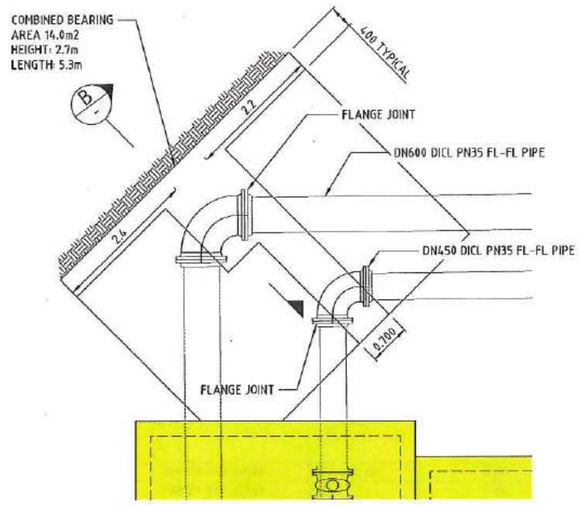

THRUST BLOCK H06
BEND E 90° OFFSET - CHAINAGE 6.950
SCALE 1:50

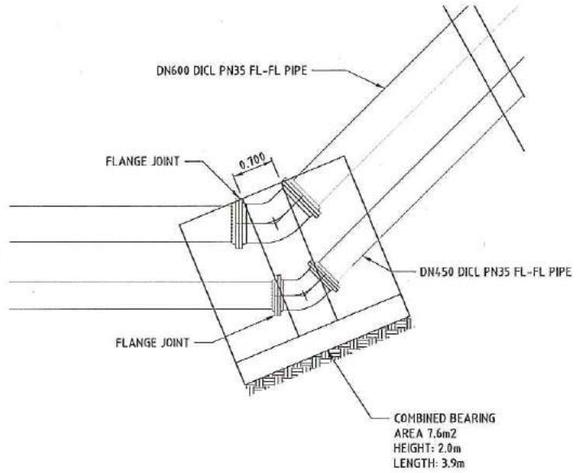

THRUST BLOCK H07
BEND D 45° - CHAINAGE 24.434
SCALE 1:50

CONNECTION TO FUTURE RESERVOIR - HORIZONTAL THRUST BLOCKS				
BEND DESCRIPTION	PIPE SIZE	BEND ANGLE (DEGREES)	SOIL BEARING CAPACITY (KPA)	MIN. BEARING AREA (M2)
B	DN450 AND DN600	22.5	100	3.9
D	DN450 AND DN600	45	100	7.6
D - OFFSET	DN450 AND DN600	45	100	7.6
E - OFFSET	DN450 AND DN600	90	100	14.0
-	DN450 AND DN600	DEAD END	100	14.0

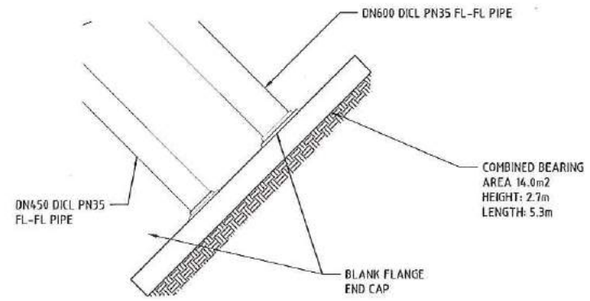

THRUST BLOCK 15
DEAD END - CHAINAGE 141.124
SCALE 1:50

LEGEND

ANCHOR BLOCKS MUST BE CAST AGAINST UNDISTURBED GROUND, CEMENT STABILISED SAND (10%) OR CONCRETE. CEMENT STABILISED SAND SHALL BE COMPACTED TO A DRY DENSITY RATIO NOT LESS THAN 100% (STANDARD COMPACTION)

NOTES:

- REFER TO PLANS AND LONGITUDINAL SECTIONS FOR THRUST BLOCK LOCATIONS.
- THRUST BLOCK BEARING AREAS HAVE BEEN CALCULATED ASSUMING
  - LATERAL ALLOWABLE BEARING CAPACITY - 100kPa
  - VERTICAL ALLOWABLE BEARING CAPACITY - 100kPa
  - TEST PRESSURE AT LOWEST POINT - 1200kPa
- ANCHOR BLOCK DESIGN PARAMETERS SHALL BE CONFIRMED BY AN EXPERIENCED GEOTECHNICAL ENGINEER AFTER EXCAVATION AND PRIOR TO PLACEMENT OF REINFORCEMENT.
- THE DEPTH FROM GROUND LEVEL TO THE CENTERLNE OF THE PIPE FOR EACH ANCHOR BLOCK HAS BEEN DETAILED ON THE DRAWINGS. THIS DEPTH SHALL BE CONFIRMED BY THE CONTRACTOR AFTER EXCAVATION AND PRIOR TO PLACEMENT OF REINFORCEMENT.
- THE DIMENSIONS OF THE BEARING AREA MAY VARY FROM THAT DETAILED ON THE DRAWINGS IF THE GROUND CONDITIONS/DEPTH TO CENTERLINE ARE DIFFERENT TO THOSE ASSUMED FOR THE DESIGN.

CONCRETE NOTES:

- CONCRETE, CONCRETE WORK, AND STEEL REINFORCEMENT SHALL CONFORM TO A.S.3600, CONCRETE STRUCTURES.
- STRENGTH GRADE = 32MPa U.O.N.
- COVER TO REINFORCEMENT SHALL BE 50mm U.N.O
- THE PROPORTION OF FLY ASH SHALL BE 25% BY WEIGHT OF THE TOTAL COMBINED WEIGHT OF FLY ASH AND CEMENT.
- MAXIMUM SLUMP OF CONCRETE = 80 + 15mm U.N.O
- MAXIMUM NOMINAL SIZE OF AGGREGATE = 20mm
- STRIP FOOTING REINFORCEMENT SHALL BE CONTINUOUS AT ALL T AND L FOOTING JUNCTIONS.
- PROVIDE ALL EXPOSED EDGES AND CORNERS WITH 20mm CHAMFERS OR FILLETS, U.N.O
- REINFORCEMENT SHOWN ON DRAWINGS IS REPRESENTED DIAGRAMMATICALLY AND NOT NECESSARILY IN TRUE PROJECTION.
- ALL REINFORCEMENT HOOKS AND COGS SHALL BE STANDARD UNLESS SHOWN OR NOTED OTHERWISE ON THE DRAWINGS.

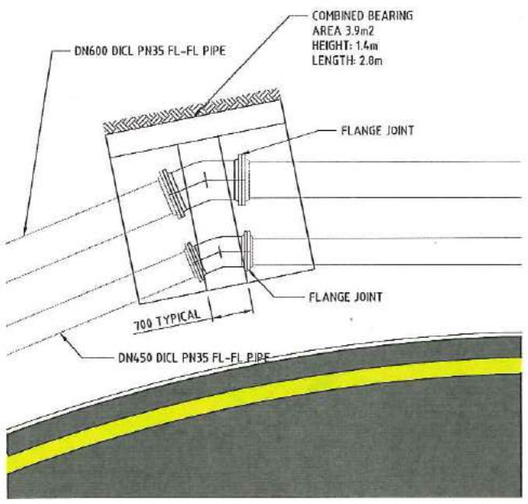

THRUST BLOCKS H08, H09, H10, H11, H12 AND H13
BEND B 22.5° - BETWEEN CHAINAGE 50.946 AND 109.128
SCALE 1:50

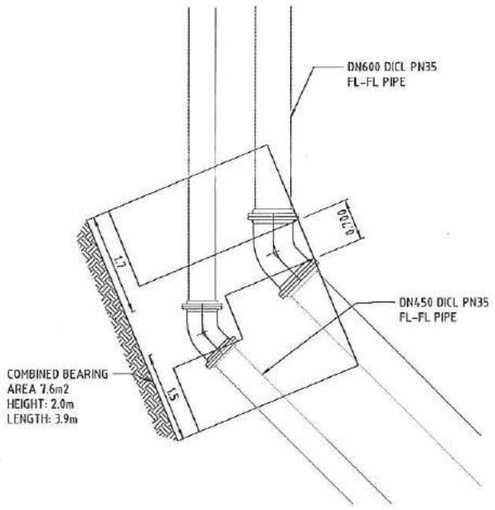

THRUST BLOCK H14
BEND D 45° OFFSET - CHAINAGE 135.521
SCALE 1:50

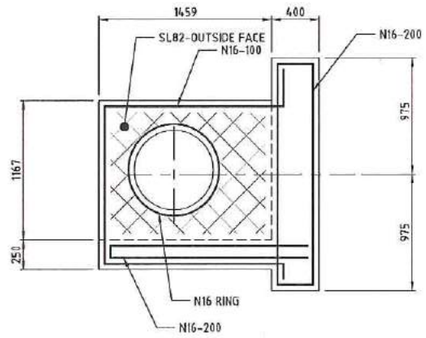

SECTION B
TYPICAL THRUST BLOCK REINFORCING
SCALE 1:25

REINFORCEMENT NOTATION:

- EXAMPLE N16-300 OR R10-300
  - N = DEFORMED CLASS N BARS
  - R = GRADE 250R PLAIN BAR
  - 16 = BAR SIZE IN MILLIMETERS
  - 300 = SPACING OF BARS

LEGEND TO NOTATIONS ON DRAWINGS:

EW EACH WAY
EF EACH FACE
T TOP
B BOTTOM
U.N.O UNLESS NOTED OTHERWISE

	BAR SIZE					
	N12	N16	N20	N24	N28	N32
MINIMUM LAP LENGTH	600	800	1150	1550	1950	2400

0 0.4 0.8 1.2 1.6 2.0m
SCALE 1:20 (A1) 1:40 (A3)
DO NOT SCALE USE ONLY THE DIMENSIONS PROVIDED.

0 1 2 3 4 5m
SCALE 1:50 (A1) 1:100 (A3)
DO NOT SCALE USE ONLY THE DIMENSIONS PROVIDED.

No.	Amendments	Drawn	Design	Appd	Registered Engineer	Reg No.	Date
A	ISSUED FOR TENDER WITH DOUGLAS SHIRE COUNCIL AMENDMENTS	ESS					05/12/16

This drawing cannot be copied or reproduced in any form or used for any purpose other than that originally intended without the written permission of Empower Engineers and Project Managers © COPYRIGHT 2017

DOUGLAS SHIRE COUNCIL

Empower ENGINEERS & PROJECT MANAGERS ABN 23 010 743 692

Client: DOUGLAS SHIRE COUNCIL
Project: PORT DOUGLAS WATER STORAGE AND TRUNK WATER SUPPLY
Title: THRUST BLOCK DETAILS FUTURE RESERVOIR LINES

Datum: AHD PSM 156708 RL 7358 (MGA) COORD

FOR TENDER

Project No. B00217 Drawing No. CM008 Rev A

Plot Date: 21/02/2017 9:35:49 AM User: CHRIS.HOBSON File Name: B:\Brisbane - Consulting\JOBS\B00217\1\B00217 Port Douglas Reservoir\4. CIVIL\DRGS\4.2 CURRENT\Preliminary Design\B00217-H12.dwg

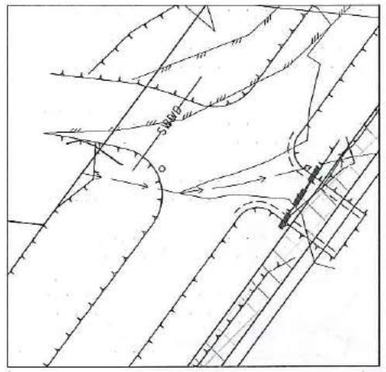

DETAIL C
SCALE 1:250@A1

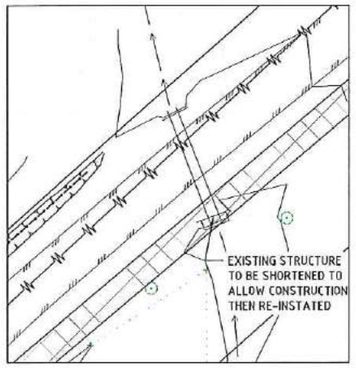

DETAIL D
SCALE 1:250@A1

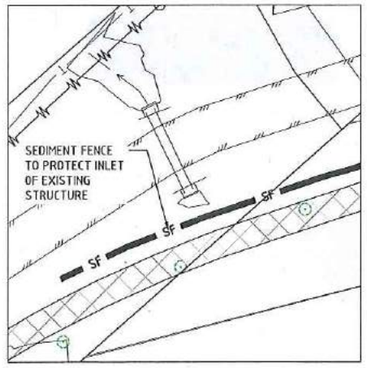

DETAIL E
SCALE 1:250@A1

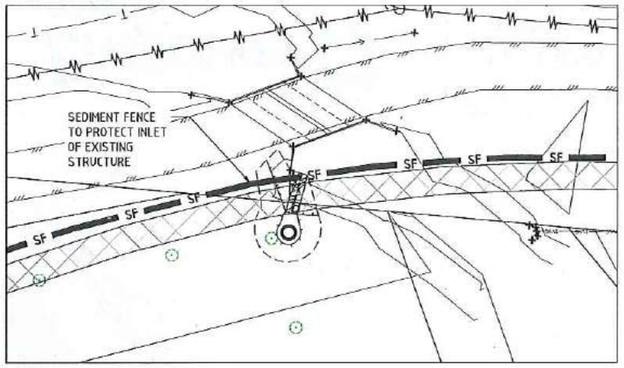

DETAIL F
SCALE 1:250@A1

LEGEND

- EXISTING CONTOURS
- SF — SEDIMENT FENCE
- TEMPORARY DIVERSION/CUT OFF DRAIN
- DISTURBED AREA FOR NEW ROAD FORMATION AND SWALE DRAINS
- DISTURBED AREA FOR TRENCHING OF NEW WATER INLET / OUTLET
- ROCK CHECK DAMS

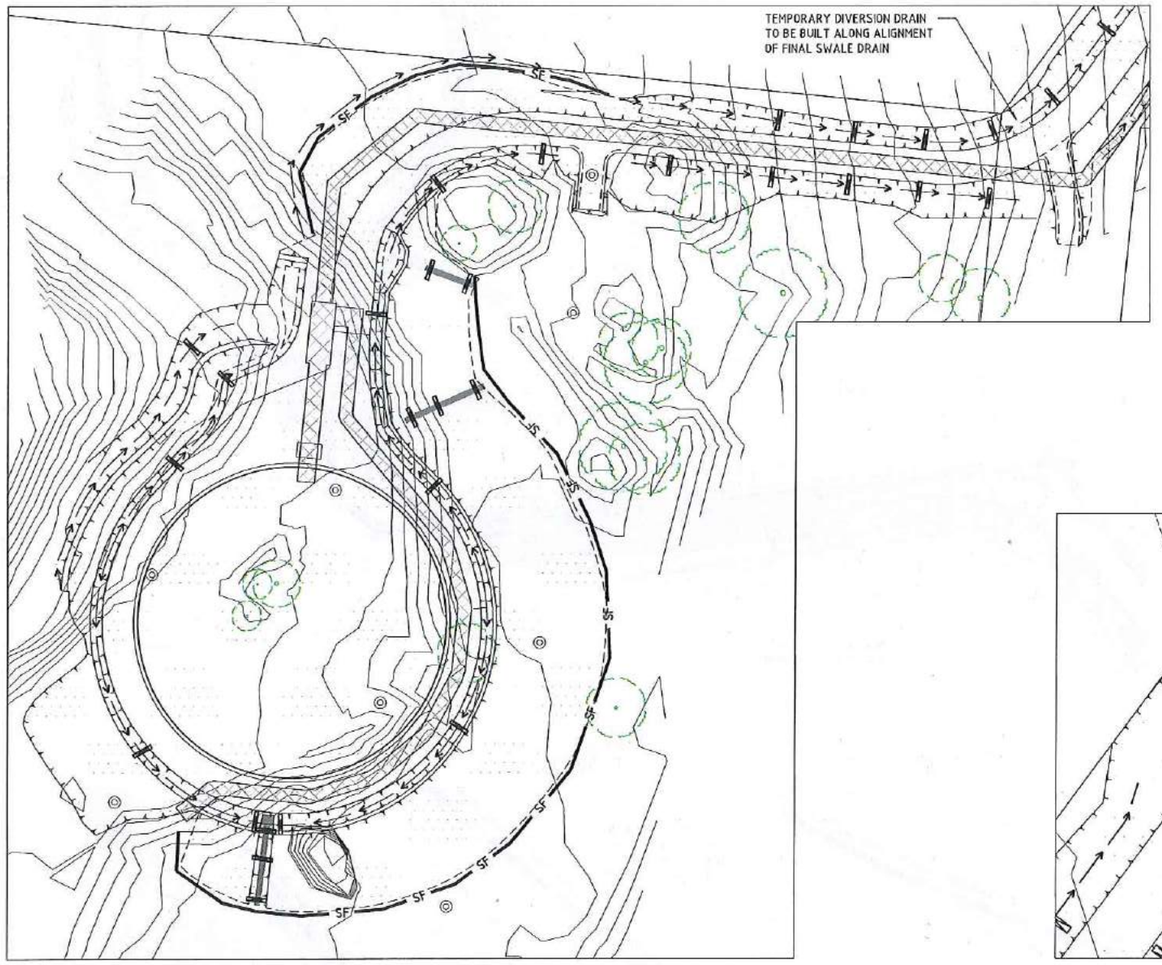

DETAIL A
SCALE 1:500@A1

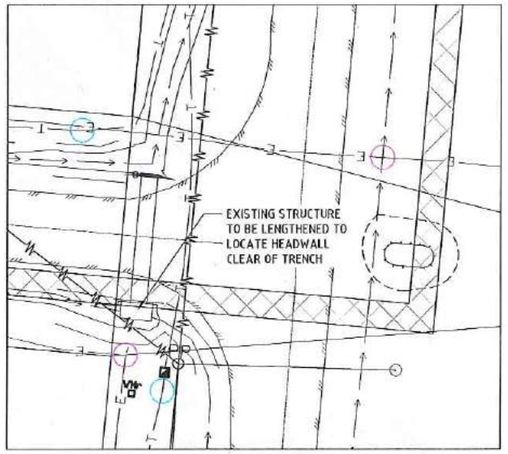

DETAIL G
SCALE 1:250@A1

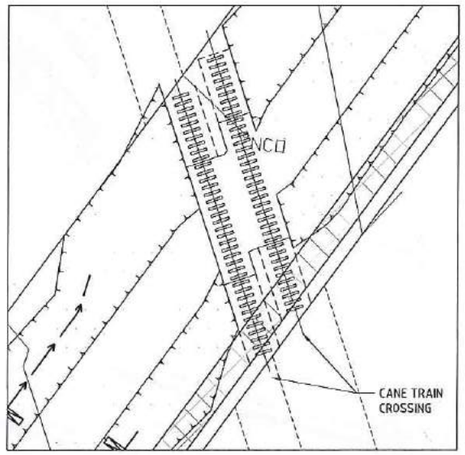

DETAIL B
SCALE 1:250@A1

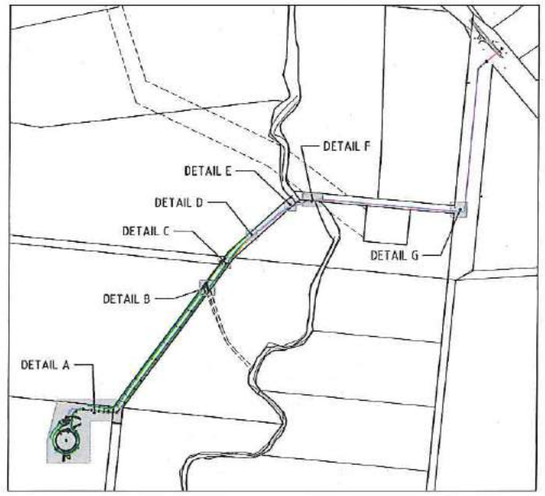

KEY MAP
NTS

No.	Amendments	Drawn	Design	Appd	Registered Engineer	Reg No.	Date
A	ISSUED FOR TENDER WITH DOUGLAS SHIRE COUNCIL AMENDMENTS	ESS					05/12/16

This drawing cannot be copied or reproduced in any form or used for any purpose other than that originally intended without the written permission of Empower Engineers and Project Managers © COPYRIGHT 2017

DOUGLAS SHIRE COUNCIL

Empower ENGINEERS & PROJECT MANAGERS
ABN 23 010 743 692

Client: DOUGLAS SHIRE COUNCIL

Project: PORT DOUGLAS WATER STORAGE AND TRUNK WATER SUPPLY

Title: SEDIMENT AND EROSION CONTROL PLAN CONSTRUCTION PHASE

Datum: AHD PSM 156708 RL 7358 (MGA) COORD

FOR TENDER

Project No. B00217 | Drawing No. CV001 | Rev A

Plot Date: 21/12/2017 1:35:35 AM User: CHRIS HIBBSON File Name: B:\Barcoo\ - Consulting\J00151\B2016\B18277 Port Douglas Reservoirs (PW)_CHRIS\A.2 CURRENT\Preliminary Design\15693-ESC

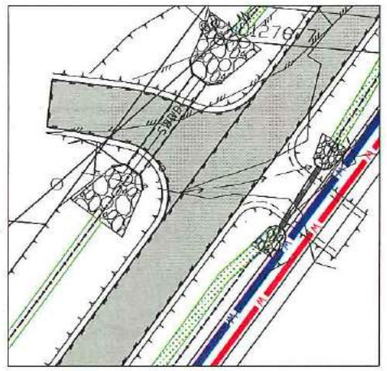

DETAIL C
SCALE 1:250@A1

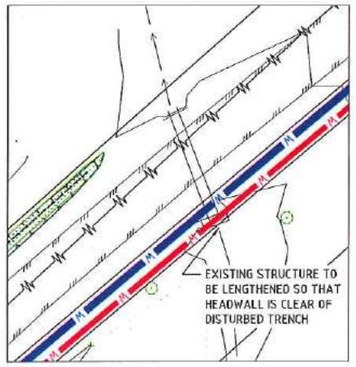

DETAIL D
SCALE 1:250@A1

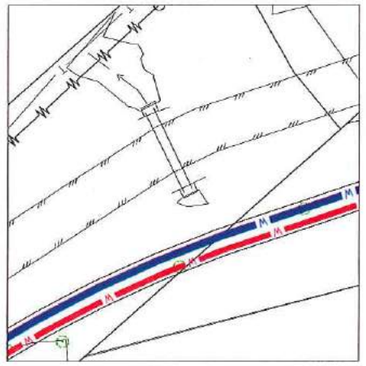

DETAIL E
SCALE 1:250@A1

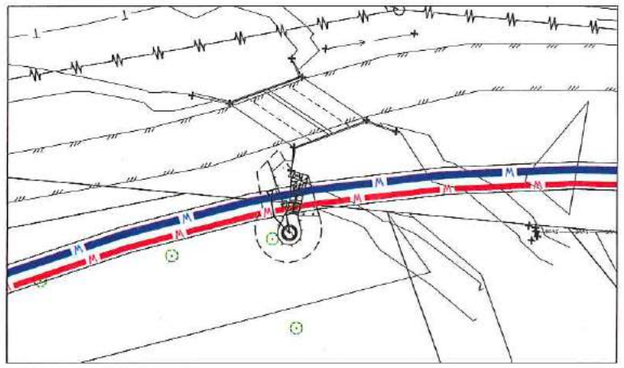

DETAIL F
SCALE 1:250@A1

LEGEND

- EXISTING CONTOURS
- SWALE DRAIN
- TURF STRIP TO BOTTOM OF NEW SWALE DRAINS
- 450Φ WATER INLET
- 600Φ WATER OUTLET
- TURF STRIP
- GROUTED ROCK PITCHING FOR SCOUR PROTECTION

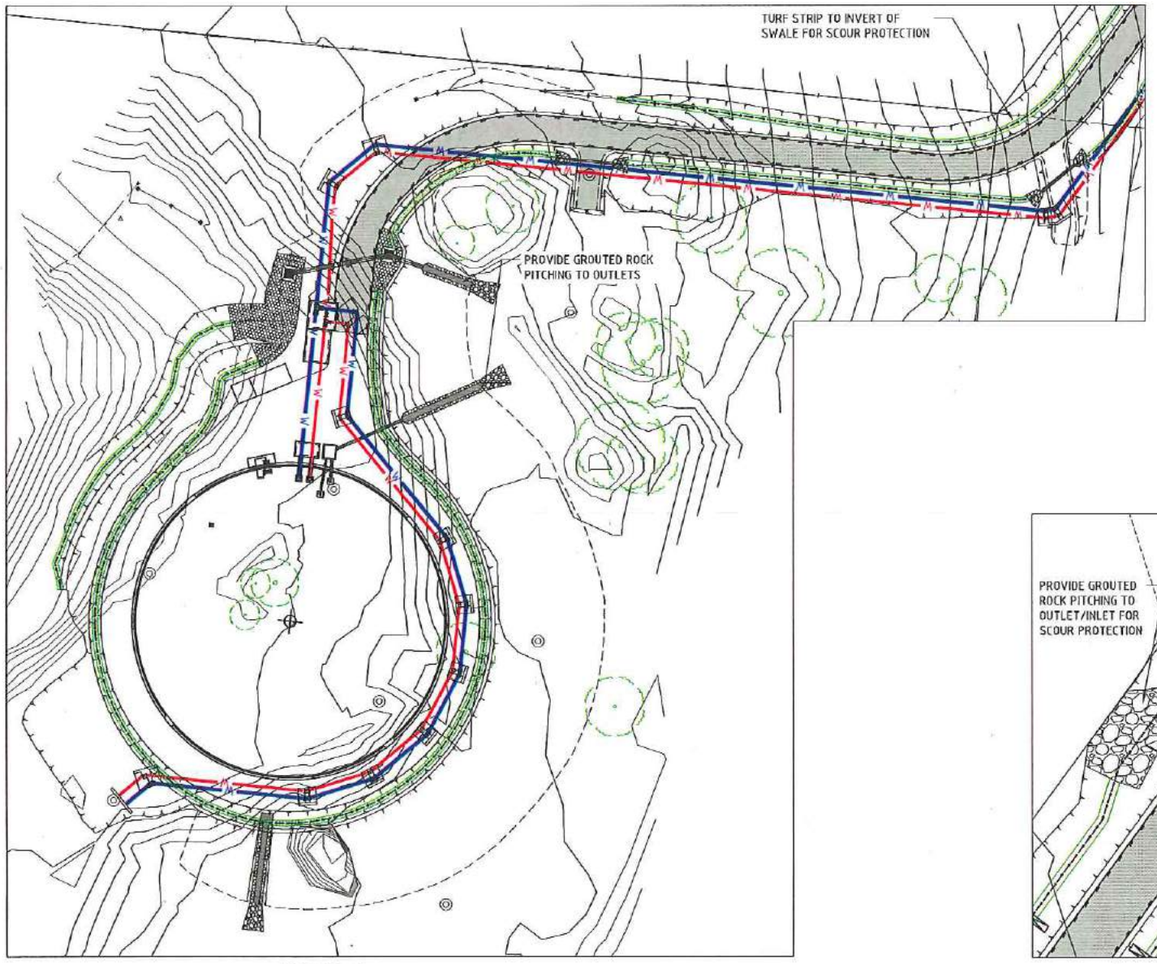

DETAIL A
SCALE 1:500@A1

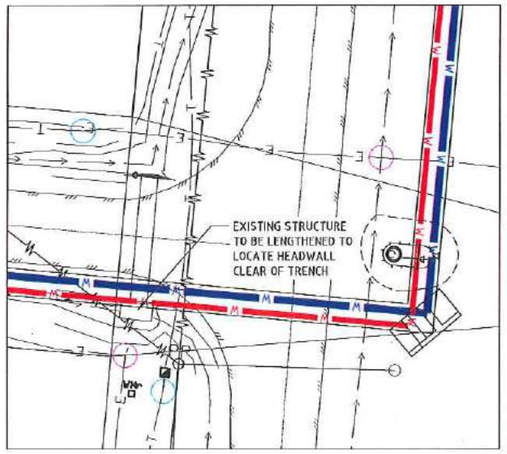

DETAIL G
SCALE 1:250@A1

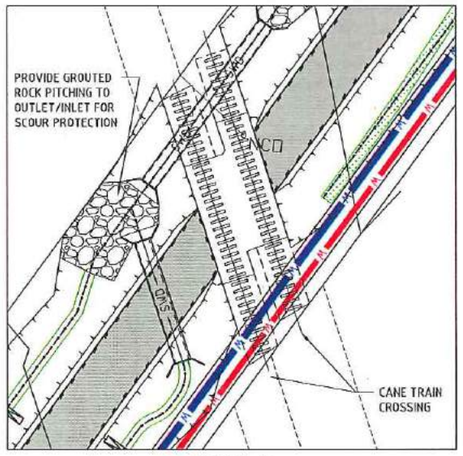

DETAIL B
SCALE 1:250@A1

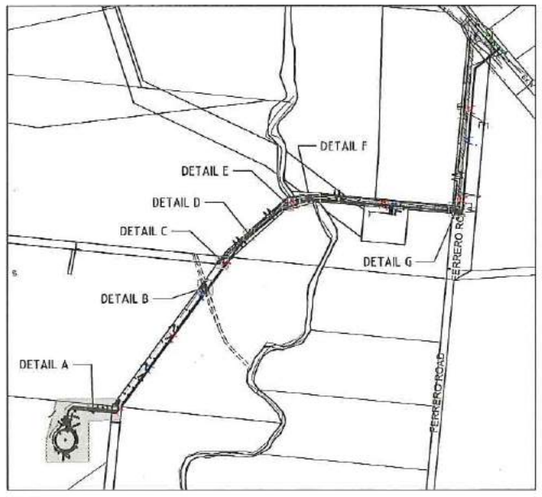

KEY MAP
NTS

No.	Amendments	Drawn	Design	Appd	Registered Engineer	Reg No.	Date
A	ISSUED FOR TENDER WITH DOUGLAS SHIRE COUNCIL AMENDMENTS	ESS					05/12/16

This drawing cannot be copied or reproduced in any form or used for any purpose other than that originally intended without the written permission of Empower Engineers and Project Managers © COPYRIGHT 2017

DOUGLAS SHIRE COUNCIL

Empower ENGINEERS & PROJECT MANAGERS ABN 23 010 743 692

Client: DOUGLAS SHIRE COUNCIL

Project: PORT DOUGLAS WATER STORAGE AND TRUNK WATER SUPPLY

Title: SEDIMENT AND EROSION CONTROL PLAN OPERATIONAL PHASE

Datum: AHD PSM 156708 RL 7358 (MGA) COORD

FOR TENDER

Project No. B00217 | Drawing No. CV002 | Rev A

Plot Date: 21/12/2017 3:39:14 AM User: CHRIS MORSON File Name: S:\Brisbane - Consulting\JOBS\B0217ts\B00217 Port Douglas Reservoirs\CIVIL\DRGS\4.2 CURRENT\Preliminary Design\TA1039-ESC

DEVICE	CONSTRUCTION REQUIREMENTS	MAINTENANCE REQUIREMENTS
CONSTRUCTION EXITS - USED TO PREVENT THE TRACKING OF DEBRIS FROM TYRES OF VEHICLES ONTO PUBLIC ROAD.	- REFER TO DETAIL ON THIS PLAN. - SURFACE WATER FLOWING TO THE CONSTRUCTION EXIT SEDIMENT TRAP MUST BE PIPED UNDER THE TRAP OR A PERIMETER BANK SHOULD BE CONSTRUCTED TO DIRECT SURFACE FLOW AWAY FROM THE TRAP. - WASH-OFF TO BE DIRECTED TO A SEDIMENT TRAP OR BUFFER ZONE. - ONLY PROVIDE ONE CONSTRUCTION EXIT FOR THE SITE UNLESS SITE ACCESS OR TOPOGRAPHY REQUIRE MORE. - ENSURE THAT CONTAMINATED VEHICLES CANNOT BYPASS IT WHEN EXITING THE SITE.	- REMOVAL OR SEDIMENT AND/OR ADDING EXTRA AGGREGATE. - REMOVE SEDIMENT TRANSPORTED ONTO ROADWAYS AND APPLY CORRECTIVE MEASURES TO PREVENT REOCCURRENCE. - EXTEND LENGTH OF THE GRAVEL PAD IF EXCESSIVE SEDIMENT IS STILL BEING TRANSPORTED OFF THE SITE.
GROSS POLLUTANT TRAPS - INTERCEPTION OF TRASH, DEBRIS AND COARSE SEDIMENTS.	- SUITABLE ACCESS SHOULD BE PROVIDED FOR MAINTENANCE VEHICLES. - ACCESS RAMPS SHOULD ALLOW TRUCK ACCESS PREFERABLY 1 IN 10 TO THE EDGE OF THE TRAP. - OPEN GPTS SHOULD BE FENCED OR SUITABLY SCREENED FROM PUBLIC ACCESS AREAS.	- INSPECT AFTER EACH MODERATE STORM EVENT. - SEDIMENT CLEANING REQUIRED WHEN THE BASIN IS HALF FULL. - CLEARING OF TRASH RACK TO OCCUR AFTER SIGNIFICANT STORM EVENTS.
ROCK CHECK DAMS (TYPE 1 DEVICE) - USED TO INTERCEPT CONCENTRATED FLOW.	- REFER TO DETAIL ON THIS PLAN. - PROVIDE AT 3m MAX. DOWNSTREAM OF ALL OUTLETS AND AT 20m MAX. ALONG OPEN CHANNELS AND AROUND FIELD INLETS. - SHOULD BE EMBEDDED AT LEAST 200mm INTO THE SOIL TO PREVENT WATER TUNNELLING BENEATH THEM. - ACCESS WILL BE REQUIRED FOR MAINTENANCE.	- EXCESSIVE SEDIMENT SHOULD BE REMOVED FROM UPSTREAM OF THE DAM. - THE UPSTREAM GRAVEL FILTER LAYER SHOULD BE RE-ESTABLISHED WHEN SEDIMENT BEGINS TO FLOW THROUGH THE STRUCTURE OR WHEN PERMEABILITY IS EXCESSIVELY REDUCED.
SEDIMENT FENCES (TYPE 3 DEVICE) - USED TO TEMPORARILY REDUCE THE VELOCITY OF CONTAMINATED SHEET FLOW ANT TO INDUCE GRAVITATIONAL SETTLEMENT OF THE ENTRAINED SEDIMENT.	- REFER TO DETAIL ON THIS PLAN. - ALL SEDIMENT FENCES TO BE INSTALLED PARALLEL TO CONTOURS. - REGULAR TURN-BACKS (10m MAX. SPACING) AND A FIRM WIRE MESH BACKING ARE REQUIRED TO PREVENT THE FURTHER CONCENTRATION OF FLOW. - THE FENCE SHOULD BE SEGMENTED INTO A SERIES OF L SHAPED FENCES TO AVOID THE CONCENTRATION OF FLOW ALONG THE FENCE. - WHERE POSSIBLE, AVOID INSTALLING SEDIMENT FENCES ALONG PROPERTY BOUNDARIES IN NEW SUBDIVISIONS UNLESS THE PROPERTY BOUNDARY ALIGNS CLOSELY WITH CONTOUR, OTHERWISE REGULAR TURN-BACKS ARE REQUIRED.	- REGULAR INSPECTIONS AND MAINTENANCE ARE REQUIRED TO REPAIR DAMAGE CAUSED BY ON-SITE VEHICLES OR THE MOVEMENT OF STOCKPILE MATERIAL. - INSPECT AFTER EACH STORM EVENT THAT RESULTS IN RUN-OFF. - REMOVE EXCESSIVE SEDIMENT DEPOSITS. - INVESTIGATE THE SOURCE OF EXCESSIVE SEDIMENT, AND APPLY REMEDIAL ACTION IMMEDIATELY. - IF THE FENCE IS REGULARLY DAMAGED, INSTALL A SECOND FENCE AT LEAST 1m DOWNSLOPE OF THE EXISTING FENCE.
GULLY INLET PROTECTION (TYPE 5 DEVICE) - USED TO LIMIT SEDIMENT BUILDUP IN STORMWATER DRAINS.	- REFER TO DETAIL ON THIS PLAN. - PROVIDE AT GULLY PITS. - PONDING MUST BE ALLOWED TO OCCUR UPSLOPE OF THE TRAP IN ORDER TO ACHIEVE PANICLE SETTLEMENT. - OPEN PIPES DURING CONSTRUCTION AND GULLY PITS ARE TO BE CAPPED OR PLUGGED (SOLID OR FILTER CLOTH) AT THE END OF EACH DAY OF WORK.	- COVERS TO GULLY GRATES TO BE REMOVED IF SUPERINTENDENT INDICATES THE GRASS STRIKE IS SUFFICIENT. - REGULAR MAINTENANCE AND INSPECTION AFTER EACH RUNOFF PRODUCING STORM EVENT. - BULK SEDIMENT SHOULD REGULARLY BE REMOVED, THE REMAINING SEDIMENT AND SILT SHOULD NOT BE ALLOWED TO WASH INTO THE STORMWATER DRAIN.
DIVERSION DRAIN/PERIMETER BANKS - USED TO DIVERT FLOW AROUND DISTURBED AREAS OR USED WITHIN DISTURBED AREAS TO DIRECT CONTAMINATED FLOW TO SEDIMENT TRAPS.	- REFER TO DETAIL ON THIS PLAN. - THE ERODIBLE NATURE OF THE SUBSOIL SHOULD BE INVESTIGATED BEFORE PLANNING ANY EXCAVATED DRAINS. - CHANNELS MUST HAVE A STABLE OUTLET. - DRAINS AND BANKS SHOULD BE SEEDED AND MULCHED IF THEIR WORKING LIFE IS EXPECTED TO EXCEED 30 DAYS.	- REGULARLY INSPECT BANKS AND REPAIR ANY SLUMPS, WHEEL TRACK DAMAGE OR LOSS OF FREEBOARD. - SEDIMENT SHOULD BE REMOVED TO AVOID PONDING.

SEQUENCE OF ACTIONS TO BE UNDERTAKEN BY CONTRACTOR

1. SITE POSSESSION	- INSTALLATION OF CONSTRUCTION EXIT. - CONSTRUCT TEMPORARY EROSION AND SEDIMENT CONTROL MEASURES SUCH AS SILT FENCING AND DIVERSION BANKS. - INSTALL DIVERSION BANKS TO DIRECT WATER FROM DISTURBED AREAS TO THE BASIN.
2. CONSTRUCTION	- TOPSOIL TO BE STRIPPED AND STOCKPILED IN LOCATIONS AGREED WITH THE SUPERINTENDENT. A SEDIMENT FENCE IS TO BE CONSTRUCTED AROUND THE BOTTOM OF THE STOCKPILE TO TRAP SEDIMENT. A DIVERSION DRAIN IS TO BE INSTALLED UPSTREAM OF THE STOCKPILE. - SEDIMENT CONTROL DEVICES REQUIRED TO BE REMOVED TO ALLOW CONSTRUCTION ACCESS ARE TO BE REINSTATED AT THE COMPLETION OF EACH WORKDAY. - MOVEMENT OF CONSTRUCTION EQUIPMENT SHALL BE LIMITED TO THE AREA OF WORK AND EXISTING ROADS. - DISTURBED AREAS ARE TO BE GRASSED FOLLOWING FINAL TRIMMING. AREAS ARE TO BE DISTURBED AND RESTORED PROGRESSIVELY. - TURF STRIPS (900mm WIDE) SHALL BE LAID TO THE BASE OF ALL DOWNSTREAM EARTHWORKS BATTERS STEEPER THAN 1 IN 4. BATTERS SHALL BE TOPSOILED AND GRASS SEEDED IMMEDIATELY UPON COMPLETION OF EARTHWORKS. - MULCH PILES ARE TO BE RESPREAD ONTO LANDSCAPED AREAS. - KERB SEDIMENT TRAPS ARE TO BE PROVIDED AT EACH DRAINAGE PIT ADJACENT DISTURBED AREAS.
3. MAINTENANCE	- REGULARLY CHECK CAPACITY OF EROSION CONTROL DEVICES. - DISTURBED AREAS ARE TO HAVE 80% COVERAGE WITHIN 30 DAYS OF FINAL ALLOTMENT TRIMMING. - FULL WIDTH TURFING OF THE FOOTPATHS.
GENERAL	- PLANS TO BE READ IN CONJUNCTION WITH STORMWATER MANAGEMENT PLAN FOR THE SITE. - THE CONTRACTOR WILL BE RESPONSIBLE FOR THE MAINTENANCE OF EROSION AND SEDIMENT CONTROL DEVICES FROM THE POSSESSION OF THE SITE UNTIL THE SITE IS CLEARED BY THE LOCAL AUTHORITY "OFF MAINTENANCE" OR UNTIL STABILISATION HAS OCCURRED TO THE SATISFACTION OF THE SUPERINTENDENT. - ADDITIONAL CONTROL DEVICES MAY BE REQUIRED BY THE SUPERINTENDENT. - ALTERNATIVE DESIGNS ARE TO BE APPROVED BY THE SUPERINTENDENT PRIOR TO CONSTRUCTION. - ROADS AFFECTED BY WORKS ARE TO BE KEPT CLEAN. MATERIAL IS TO BE SWEPT FROM ROAD SURFACE BUT NOT WASHED.

WATER QUALITY MANAGEMENT

1. WATER QUALITY MANAGEMENT MEASURES AND OBJECTIVES SHALL COMPLY WITH THE ENVIRONMENTAL PROTECTION ACT, ENVIRONMENTAL PROTECTION POLICY - WATER AND STORMWATER MANAGEMENT PLAN BY BMD CONSULTING PTY LTD.
2. THE CONTRACTOR SHALL MAINTAIN A WATER QUALITY LOG ON SITE AT ALL TIMES FOR WATER QUALITY MONITORING AS PER THE WATER QUALITY MONITORING TABLES. THIS LOG SHALL NOMINATE (BY LOCATION), THE RELEVANT TEST, THE DATE THEY WERE INSPECTED AND ANY RELEVANT NOTES. THE SITE FOREMAN SHALL SIGN EACH LOG ENTRY AS CONFIRMATION THAT ALL CONTROL MEASURES ARE FUNCTIONAL AND ADEQUATELY MAINTAINED. THE LOG SHALL ALSO INCLUDE ALL RELEVANT INFORMATION RELATING TO CHEMICAL FLOCCULATION RATES, RESIDENCE TIME ETC., IF USED ON THE SITE.
3. MONTHLY REPORT GIVING THE RESULTS OF THE WATER QUALITY LOGS INCLUDING SUMMARY OF RESULTS AGAINST OBJECTIVES SHALL BE FORWARDED TO THE SUPERINTENDENT (FOR RELEASE TO LOCAL AUTHORITY AND CLIENT).
4. WHERE WATER QUALITY RESULTS FAIL TO MEET THE APPROVED CRITERIA, CORRECTIVE ACTION OR ALTERNATIVE PROCEDURES WILL BE REQUIRED TO BE IMPLEMENTED IMMEDIATELY TO ACHIEVE COMPLIANCE WITH THESE WATER QUALITY OBJECTIVES.

DUST

1. NO VISIBLE DUST EMISSIONS, AND OTHER AIR EMISSIONS INCLUDING ODOURS MUST OCCUR AT THE BOUNDARIES OF THE SITE DURING EARTHWORKS AND CONSTRUCTION ACTIVITIES ON THE SITE.
2. THE CONTRACTOR TO PROVIDE A WATER TRUCK AS REQUIRED TO ELIMINATE THE DUST PROBLEM CAUSED BY SITE TRAFFIC.

WATER QUALITY OBJECTIVES TABLE

OIL AND GREASE	NO VISIBLE FILMS OR ODOUR.
LITTER/GROSS POLLUTANTS	NO ANTHROPOGENIC (MAN-MADE) MATERIAL GREATER THAN 5mm IN ANY DIMENSION.

NOTE

1. IT IS THE CONTRACTORS RESPONSIBILITY TO TAKE DUE CARE OF NATURAL VEGETATION.
2. NO CLEARING IS TO BE UNDERTAKEN WITHOUT PRIOR APPROVAL FROM THE SUPERINTENDENT. TO AVOID DISTURBANCE TO EXISTING TREES, EARTHWORKS WILL BE MODIFIED AS DIRECTED ON-SITE BY THE SUPERINTENDENT.
3. THE LOCATION OF SILTATION AND EROSION CONTROL DEVICES WILL BE DETERMINED ON SITE BY THE SUPERINTENDENT OR AT THE CONTRACTOR'S DISCRETION.
4. ACCESS TRACKS THROUGH THE SITE WILL BE LIMITED TO THOSE DETERMINED BY THE SUPERINTENDENT AND THE CONTRACTOR PRIOR TO ANY WORK COMMENCING.

SEDIMENT FENCE NOTES

- WOVEN WIRE TO BE FASTENED SECURELY TO FENCE POSTS WITH WIRE TIES OR STAPLES.
- FILTER CLOTH TO BE FASTENED SECURELY TO WOVEN WIRE FENCE WITH TIES SPACED EVERY 600mm AT TOP OF MID SECTION.
- WHEN TWO SECTIONS OF FILTER CLOTH ADJOIN EACH OTHER THEY SHALL BE OVERLAPPED BY 150mm AND FOLDED.
- MAINTENANCE SHALL BE PERFORMED AS NEEDED AND MATERIAL REMOVED WHEN "BULGES" DEVELOP IN THE SILT FENCE.

STEEL	EITHER T OR U TYPE OF 50mm HARDWOOD
FENCE:	WOVEN WIRE 14 ga 150mm MAX. MESH OPENING
FILTER CLOTH:	FILTER AS SPECIFIED (TERRAM 1000, POLYFELT TS 500 BIDUM U24 OR EQUIVALENT)
PREFABRICATED UNIT:	GEOFAB ENVIROFENCE O
APPROVED EQUIVALENT	

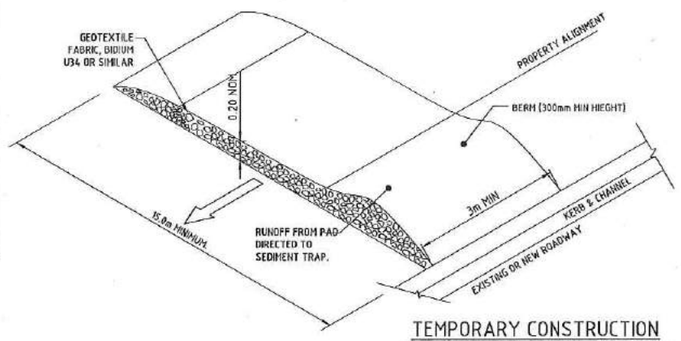

TEMPORARY CONSTRUCTION ENTRY / EXIT SEDIMENT TRAP
NOT TO SCALE

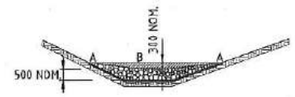

TYPICAL SECTION SWALE AT CHECK DAM
NOT TO SCALE

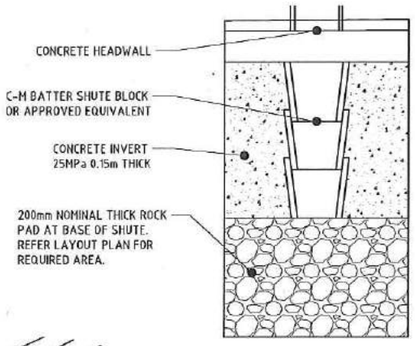

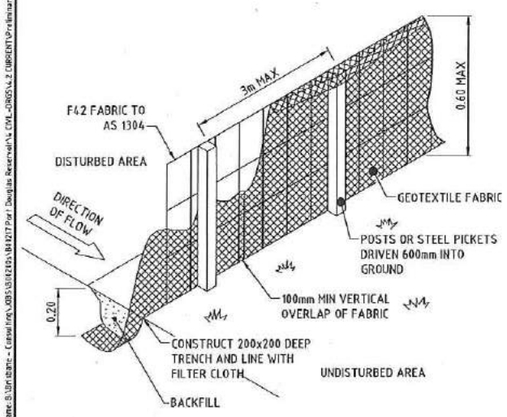

ELEVATION

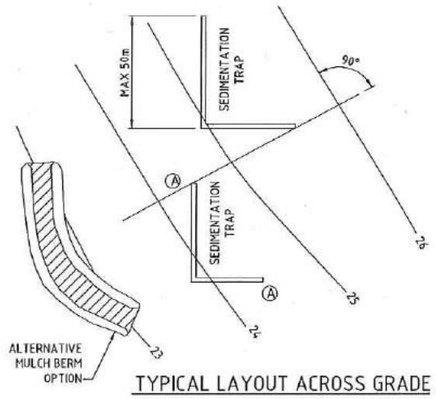

TYPICAL LAYOUT ACROSS GRADE POINTS A AT SAME ELEVATION

SEDIMENT FENCE DETAIL
NOT TO SCALE

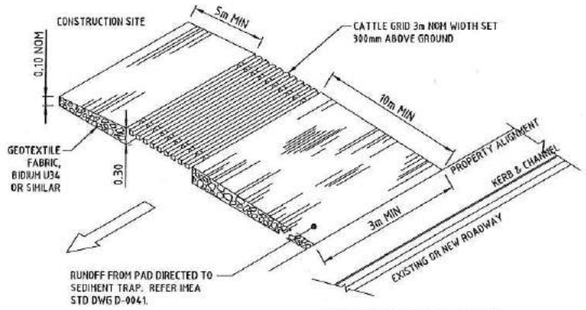

CONSTRUCTION EXIT DRY SYSTEM
REFER IPWEA STANDARD DRAWING D-0040
NOT TO SCALE

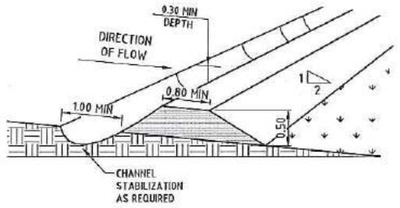

CATCH DRAINS AND PERIMETER BANKS
NOT TO SCALE

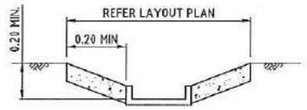

BATTER SHUTE
NOT TO SCALE

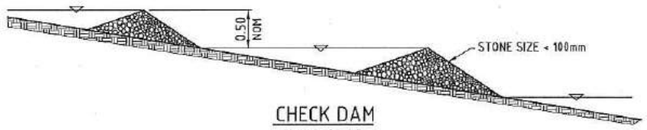

CHECK DAM
NOT TO SCALE

No.	Amendments	Drawn	Design	Appd	Registered Engineer	Reg No.	Date
A	ISSUED FOR TENDER WITH DOUGLAS SHIRE COUNCIL AMENDMENTS	ESS					05/12/16

This drawing cannot be copied or reproduced in any form or used for any purpose other than that originally intended without the written permission of Empower Engineers and Project Managers ©COPYRIGHT 2017

DOUGLAS SHIRE COUNCIL

Empower ENGINEERS & PROJECT MANAGERS ABN 23 010 743 692

Client: DOUGLAS SHIRE COUNCIL

Project: PORT DOUGLAS WATER STORAGE AND TRUNK WATER SUPPLY

Title: SEDIMENT AND EROSION CONTROL TYPICAL DETAILS

Datum: AHD PSM 156708 RL 7358 (MGA) COORD

FOR TENDER

Project No. B00217 | Drawing No. CV003 | Rev A

Plot Date: 21/12/2017 10:17 AM File Name: S:\Brisbane - Catenary\JOBS\B0217\Port Douglas Reservoir\CIVIL\DRGS\B0217-CV003 Preliminary Design.dwg Date: CHRIS NICHOLSON

DOUGLAS SHIRE COUNCIL

PORT DOUGLAS WATER STORAGE

STRUCTURAL NOTES SHEET

GENERAL NOTES

G1. This drawing is to be read in conjunction with the relevant Architectural's and all other consultants drawings and specifications. Any discrepancy shall be reported before proceeding with work.

G2. The builder shall check and be responsible for the correctness of all dimensions and any discrepancy shall be reported immediately. Dimensions shall not be obtained by scaling the structural drawings.

G3. Stability of the building during construction and excavation in the vicinity of neighbouring buildings is the responsibility of the builder. All proposals for such work shall be submitted to the Consulting Engineer before work proceeds.

G4. The builder shall be responsible to maintain the structure in a safe and stable condition and prevent overload of any part during construction.

G5. Not withstanding inspection by the Consulting Engineer and/or other consultants the Builder shall be primarily responsible to ensure that work is constructed in accordance with all drawings and specifications.

G6. All workmanship and materials shall be in accordance with the Building Code of Australia statutory requirements and current Australian Standards.

G7. The structural work shown on project drawings has been designed in accordance with AS/NZS 1170 SERIES - STRUCTURAL DESIGN ACTIONS (Parts 1 to 4) for the following criteria where applicable :

WIND LOADS :	REGION	C
	TERRAIN CATEGORY	2
	ULTIMATE REGIONAL WIND SPEED Vsh (m/s)	69.3
	SERVICEABILITY REGIONAL WIND SPEED Vsh (m/s)	49.3
	TERRAIN/HEIGHT MULTIPLIER Mz,cat	1.0
	SHIELDING MULTIPLIER Ms	1.0
	TOPOGRAPHIC MULTIPLIER Mt	1.18
EARTHQUAKE LOADS :	STRUCTURE CLASSIFICATION	TYPE B
	SITE FACTOR	-
	RESPONSE FACTOR	-
	ACCELERATION COEFFICIENT	0.06
LIVE LOADS :	REFER DRAWINGS	
SUPERIMPOSED DEAD LOADS :	REFER DRAWINGS	
CONCRETE EXPOSURE CLASSIFICATION/S		-
FIRE RESISTANCE PERIOD (HOURS)		-

REGION	ELEMENT		
	COLUMNS	WALLS	FLOORS

G8. Footings have been designed to bear on BED ROCK having a safe bearing capacity of 3000 kPa.
For site specific information refer to :
Geotechnical Report # 27526
prepared by DOUGLAS PARTNERS

G9. Load bearing walls and columns under slab shown shaded thus:
Load bearing walls & columns over slab shown hatched thus:
CONCRETE BLOCKWORK

G10. Termite control barriers in accordance with AS 3660.1 are to be specified, installed, inspected & certified by others. The details on this drawing are based on monolithic construction as defined in clause 1.5.1 of AS 3660.1. If construction joints are incorporated into the construction then additional STARTER BARS - N12@900 centres shall be provided through construction joints and they shall be fully anchored on both sides of such construction joints.

CONCRETE NOTES

C1. All materials, tolerances and workmanship shall be in accordance with the current Concrete Structures Australian Standard AS 3600.

C2. Concrete Ductility.
The design assumes the physical and mechanical properties of concrete stated in Section 6 of AS 3600. Concrete with non typical characteristics shall not be used without the written approval of the Consulting Engineers.

ELEMENT	DESIGN STRENGTH f'c MPa	SLUMP (mm)	MAX AGG SIZE (mm)	ASSESSMENT METHOD
BLOCKWORK CORES	S20	230	10	PRODUCTION
FOUNDATIONS	N20	80	20	PRODUCTION
SLAB	S40	80	20	PRODUCTION
WALLS	N32	80	20	PRODUCTION
COLUMNS	N40	80	20	PRODUCTION
RESERVOIR WALLS	S40	80	20	PRODUCTION

Admixtures to improve or modify the long term properties of the concrete shall not be used without the written approval of the Consulting Engineer.
Admixtures to modify workability for placing and/or finishing shall be permitted provided the concrete supplier certifies they have no detrimental effect on the long term properties of the concrete.

C3. Initial curing of concrete shall commence immediately after finishing operations and shall comply with clauses 4.4 and 4.5 of AS 3600. Subsequent curing shall continue until the builder can show the concrete has reached the specified characteristic strength f'c.
The use of sprayed curing membranes is subject to approval by the Consulting Engineer.

C4. All concrete shall be mechanically vibrated and the vibrator shall not be used to spread concrete.

C5. Depth of Beams is given first and includes slab thickness.

C6. Concrete sizes shown do not include thickness of applied finishes.

C7. Conduits, pipes, etc shall not be placed in cover concrete. Conduits shall not be wired to reinforcement or tendons running parallel to the conduits and shall have 25mm minimum separation.

C8. Construction joints, other than those shown on the drawing shall not be used without prior approval of the Consulting Engineer.

C9. All exposed concrete edges and re entrant corners shall be chamfered or filleted 20mm unless noted otherwise.

C10. Where walls are non-load bearing at either horizontal or vertical faces they shall be separated from the concrete by 12mm thick compressible filler board.

C11. At small penetrations reinforcement shall not be cut but be displaced to each side of the opening.

C12. All formwork shall comply with AS 3610 and shall remain in position for a minimum of 3 days.
Where slabs and beams are to support brickwork over, formwork and props must be removed prior to commencement of this brickwork.
Successive floors shall be supported by no less than 2 suspended slabs.

REINFORCEMENT NOTES

R1. Reinforcing materials and procedures shall comply with the requirements of clauses 6.2 and 19.2 of AS 3600.
R denotes Plain Round Bar of Grade 250MPa Normal Ductility Steel to AS 3679.1
S denotes Deformed Bar of Grade 250MPa Normal Ductility Steel to AS/NZS 4671.
N denotes Deformed Ribbed Bar of Grade 500MPa Normal Ductility Steel to AS/NZS 4671.

Denotes main wire of rectangular mesh to AS/NZS 4671.

Denotes square mesh to AS/NZS 4671.

R2. All reinforcement shall be tied and supported during concrete casting by sufficient non staining proprietary products to ensure the tolerance requirements of clause 19.5.3 of AS 3600 are achieved.

R3. Splices in reinforcement shall be made only in the positions shown and shall be sufficient to develop the full strength of the reinforcement. Unless noted otherwise all reinforcement laps shall meet the requirements of clauses 13.2.2 and 13.2.3 of AS 3600.
For fabric the outermost wires should be overlapped by at least the spacing of these outermost wires plus 25mm.

R4. Concrete cover to all reinforcement shall be as tabulated unless shown otherwise.

ELEMENT	STANDARD FORMWORK AND COMPACTION			CAST AGAINST GROUND OR NON COMPLYING FORMS
SURFACE EXPOSURE AS 3600	A1 Interior Environment	A2 Exterior Temperate	B2 Exterior Coastal f'c=40MPa	
FOOTINGS	---	75	75	75
COLUMNS	40	40	50	60
WALLS	30	30	45	60
BEAMS	30	30	45	60
SLABS	20	30	45	60

R5. Any tie rods not shown on the drawings shall be N12@300 centres.

R6. Welding of reinforcement shall not be permitted without the written approval of the Consulting Engineer. Reinforcement shall not be hot bent on site. Reinforcement cold bent on site and subsequently straightened or bent in the reverse direction shall not be bent again within 24 bar diameters of the previous bend.

MASONRY NOTES

M1. All materials, tolerances and workmanship shall be in accordance with the current Masonry Structures Australian Standard AS 3700.

M2. Masonry units shall have a minimum characteristic unconfined compressive strength f'uc of :

Concrete Masonry	f'uc =	15 MPa
Calcium Silicate Masonry	f'uc =	10 MPa
Clay Masonry	f'uc =	20 MPa

M3. All masonry shall be fully bedded in freshly prepared mortar having the following mortar compositions :
i) Concrete Masonry - One part cement, one part lime and six parts clean sand.
ii) Clay Masonry - One part cement, one fourth part lime and three parts sand.
iii) Calcium Silicate and Autoclaved Aerated Concrete Masonry - The mortar compositions shall be in accordance with manufacturers specifications and recommendations.

The constructed masonry shall have a characteristic compressive strength f'mb of :

Concrete Masonry	f'mb =	6.2 MPa
Calcium Silicate Masonry	f'mb =	6.3 MPa
Clay Masonry	f'mb =	4.4 MPa

M4. No chases shall be cut into load bearing blockwork without approval of the Consulting Engineer.

M5. The top course of all load bearing masonry walls where not connected to the slab shall be covered with a bitumen coated metal flashing, galvanised iron strips, or an approved equivalent.

M6. Where walls are non load bearing at either horizontal or vertical faces they shall be separated from the concrete by 12mm thick compressible filler board.

M7. Raking of mortar joints shall not be permitted unless approved by the Consulting Engineer.

M8. Vertical and horizontal control joints shall be provided in accordance with the drawings.

REINFORCED BLOCKWORK NOTES

M9. Mortar joints, including bed joints and perpends shall be completely filled and not exceed 10mm thick. Thin-bed mortar joints shall not be less than 2mm and not greater than 4mm thick.

M10. Mortar joints shall not be raked unless approved by the Consulting Engineer.

M11. All reinforced concrete masonry shall be constructed in accordance with the current Masonry Structures Australian Standard AS 3700

M12. Walls shall be constructed with 20.40 'H' blocks for 200mm thick walls and 30.40 blocks for 300mm thick walls.

M13. Bottom course shall be constructed with 20.60 blocks for 200mm thick walls and twin 20.25 blocks for 300mm thick walls.

M14. All block cores shall be cleared of mortar droppings and other foreign material before filling with concrete.

M15. Reinforcement shall be placed and securely positioned as shown on the drawings, before placing concrete.

MASONRY WALL TIES

M16. All wall ties shall comply with the requirements of AS 3700 clause 10.5.1. Wall ties for cavity wall construction shall be as per AS 3700 table 10.5 unless specified otherwise on drawings.

STEELWORK NOTES

S1. All materials, tolerances and workmanship shall be in accordance with the current Australian Standards :

AS 4100	Steel Structures.
AS/NZS 1554.1	Structural Steel Welding - Welding of Steel Structures.
AS/NZS 3678	Structural Steel - Hot Rolled Plates, Floor-Plates and Slabs.
AS/NZS 3679.1	Structural Steel - Hot Rolled Bars & Sections.
AS/NZS 3679.2	Structural Steel - Welded I sections.

S2. All Structural Steel shall be in accordance with Australian Standard AS 1163 - Structural Steel Hollow Sections, unless noted otherwise.

S3. All Fasteners shall be in accordance with the current Australian Standards unless noted otherwise :

AS 1111	ISO Metric Hexagon Commercial Bolts and Screws.
AS 1112	ISO Metric Hexagon Nuts, including Thin Nuts, Slotted Nuts and Castle Nuts.
AS 1252	High Strength Steel Bolts with Associated Nuts and Washers for Structural Engineering.

S4. All Structural Steel other than RHS and SHS sections shall be Grade 300 unless noted otherwise.

S5. All Structural Steel RHS and SHS sections shall be Grade 350 unless noted otherwise.

S6. All Welding shall be carried out using E41XX electrodes unless noted otherwise. All welds not designated on plan shall be 6mm fillet welds.

S7. All connections associated with the use of High Strength Bolts shall be friction grip type unless noted otherwise. Friction grip connection surfaces are not to be painted.

S8. All Steelwork where concrete encased shall be wrapped with SL41 mesh and shall have 50mm minimum cover. All encased steelwork is not to be painted.

S9. Two copies of all workshop details must be submitted to the Consulting Engineer and approval obtained before fabrication.

NOTES : FOR CONCRETE TO WATER RETAINING STRUCTURE

1. PROVISION OF WATERSTOPS AT CONSTRUCTION JOINTS TO BE AS PER SPECIFICATIONS.
2. FORMWORK STRIPPING TIMES AS PER TABLE 5.4.1 OF AS 3610 - FORMWORK FOR CONCRETE.
3. CONCRETE TO COMPLY WITH REQUIREMENTS OF AS 3735-2001.
4. CHARACTERISTIC STRENGTH f'c - 40MPa
5. MINIMUM COVER TO REINFORCEMENT - 40mm EXTERNAL, 40mm INTERNAL
6. AVERAGE COMPRESSIVE STRENGTH AT COMPLETION OF CURING OF NOT LESS THAN 75% OF THE SPECIFIED f'c
7. CEMENTITIOUS MATERIAL CONTENT OF NOT LESS THAN $320kg/m^3$
8. DRYING SHRINKAGE STRAIN AT 56d NOT GREATER THAN $700x10^{-6}$ DETERMINED IN ACCORDANCE WITH AS1012.13.
9. TOTAL ALKALI REACTIVE ALKALI CONTENT NOT GREATER THAN 3.0kg Na_2O (EQUIVALENT) PER CUBIC METRE, DETERMINED AS OUTLINED IN HB79.
10. WATER/CEMENT RATIO SHOULD NOT EXCEED 0.5
11. CURING TO BE CARRIED OUT AS PER CLAUSE 5.2.2 OF AS 3735 - CONCRETE STRUCTURES FOR RETAINING LIQUIDS.

NOTES : FOR PROTECTIVE COATING OF STRUCTURAL STEEL

1. ALL WORK SHALL BE CARRIED OUT IN ACCORDANCE WITH REQUIREMENTS OF AS 2312.
2. THE INTENDED SURFACE LIFE PROVIDED BY PROCTECTIVE COATINGS IS 50 YEARS FOR TANKS AND RESERVOIRS, RECOGNIZING THE NEED FOR ONGOING MAINTENANCE TO PROVIDE THE SPECIFIED SERVICE LIFE.
3. SURFACE PROTECTION COATINGS SHALL BE DESIGNED FOR 20 YEARS LIFE WITHOUT THE NEED OR REPLACEMENT, UNLESS REQUIRED OTHERWISE BY AS 2312.

DRAWING SCHEDULE

DWG No.	DRAWING NAME
S-001	STRUCTURAL NOTES SHEET
S-100	PLAN : OVERALL SITE LAYOUT
S-101	GENERAL ARRANGEMENT PLAN
S-200	CONCRETE OUTLINE & POST TENSIONING LAYOUT PLAN
S-201	CONCRETE & WALL SECTIONS : SHEET 1 OF 2
S-202	CONCRETE & WALL SECTIONS : SHEET 2 OF 2
S-210	WALL ACCESS HATCH : ELEVATION & DETAILS
S-211	PART PLAN : PIPE PENETRATION LAYOUT & DETAILS
S-220	INLET/OUTLET & SCOUR OVERFLOW PIT DETAILS
S-221	JUNCTION/FLOWMETER PIT DETAILS
S-222	PIT DETAILS SHEET
S-300	ROOF FRAMING PLAN
S-301	FRAMING ELEVATIONS : SHEET 1 OF 2
S-302	FRAMING ELEVATIONS : SHEET 2 OF 2
S-303	STEEL DETAILS SHEET
S-304	PLATFORM PLAN & DETAILS
S-310	EXTERNAL LADDER DETAILS : SHEET 1 OF 2
S-311	EXTERNAL LADDER DETAILS : SHEET 2 OF 2
S-312	INTERNAL LADDER DETAILS : SHEET 1 OF 2
S-313	INTERNAL LADDER DETAILS : SHEET 2 OF 2
S-314	LADDER BASE & ENCLOSURE DETAILS

T1	ISSUED FOR TENDER	C.J.F.	17.02.17
	Amendment	By	Date

glynntucker consulting engineers
GLYNN TUCKER Pty Ltd
3/32 Balaclava Street
P.O. Box 8284, Woolloongabba 4102
t : 07 3891 1238
f : 07 3892 5573
e : brisbane@glynntucker.com.au
www.glynntucker.com.au
Also at Townsville
t : 07 4772 4722, f : 07 4721 1968

DOUGLAS SHIRE COUNCIL

Project
PORT DOUGLAS WATER STORAGE AND TRUNK WATER SUPPLY FOR DOUGLAS SHIRE COUNCIL

Sheet Title STRUCTURAL NOTES SHEET

Drawn	C.R.P.	
Date	OCTOBER 2012	
Scale	1:100	A1 SHEET
Checked	RAGlen	
Approved	C.J. Morrison	NHE Aust REG 4953
Project No. 24021	Drg No. S-001 T1	

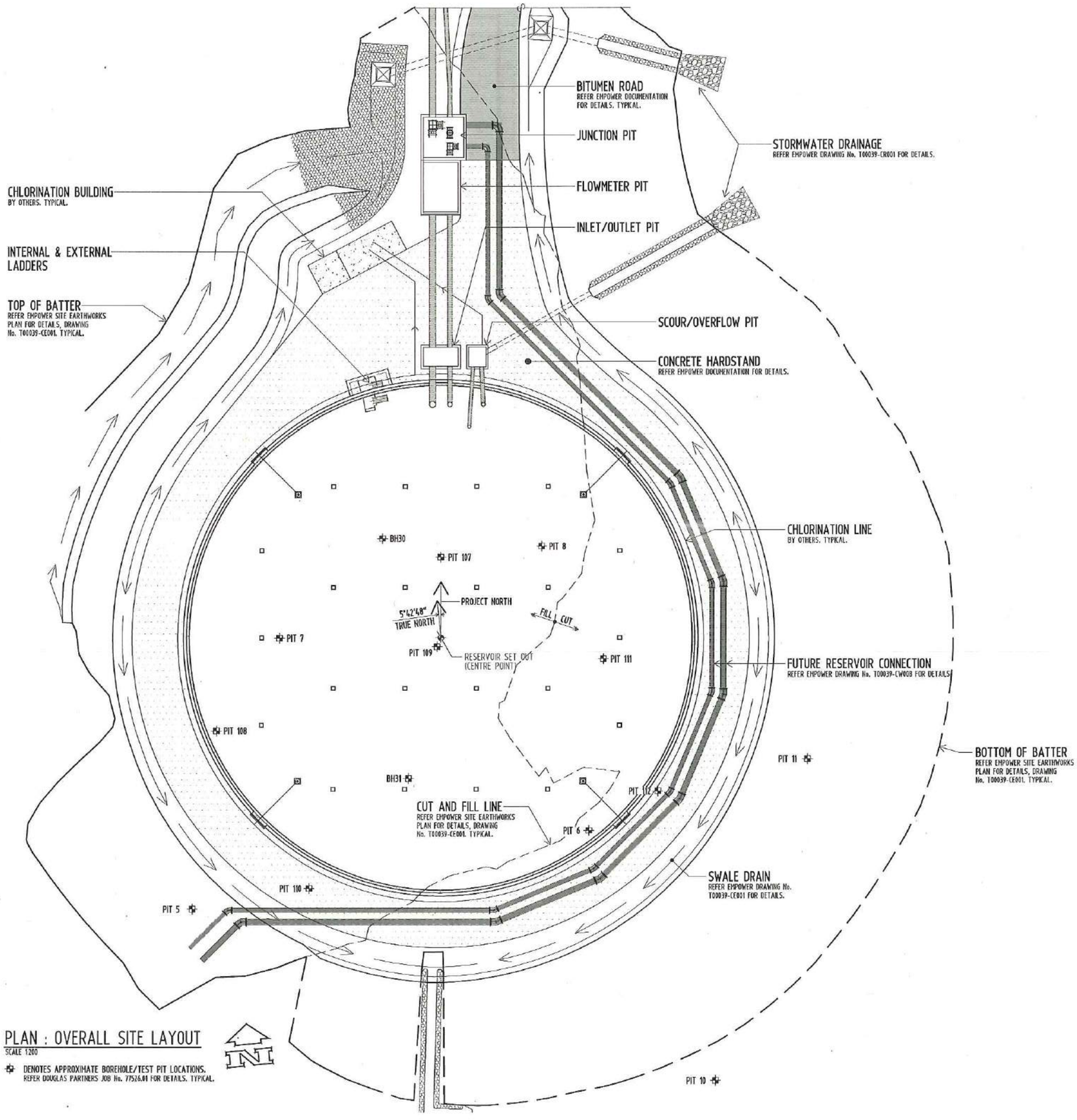

PLAN : OVERALL SITE LAYOUT

SCALE 1:200

DENOTES APPROXIMATE BOREHOLE/TEST PIT LOCATIONS. REFER DOUGLAS PARTNERS JOB No. 77526.01 FOR DETAILS. TYPICAL.

T1	ISSUED FOR TENDER	C.J.F.	17.02.17
	Amendment	By	Date

glynntucker consulting engineers
GLYNN TUCKER Pty Ltd
3/32 Balaclava Street
P.O. Box 8284, Woolloongabba 4102
t : 07 3839 1238
f : 07 3832 5573
e : brisbane@glynntucker.com.au
www.glynntucker.com.au
Also at Townsville
t : 07 4772 4722, f : 07 4721 1968

DOUGLAS SHIRE COUNCIL

Project
PORT DOUGLAS WATER STORAGE AND TRUNK WATER SUPPLY FOR DOUGLAS SHIRE COUNCIL

Sheet Title PLAN : OVERALL SITE LAYOUT

Drawn	C.R.P.	
Date	OCTOBER 2012	
Scale	1:200	A1 SHEET
Checked		
Approved		MIE Aust RPEQ 4953
Project No. 24021	Drg No. S-100	T1

REFER DRAWING No. S-001 FOR STRUCTURAL NOTES.

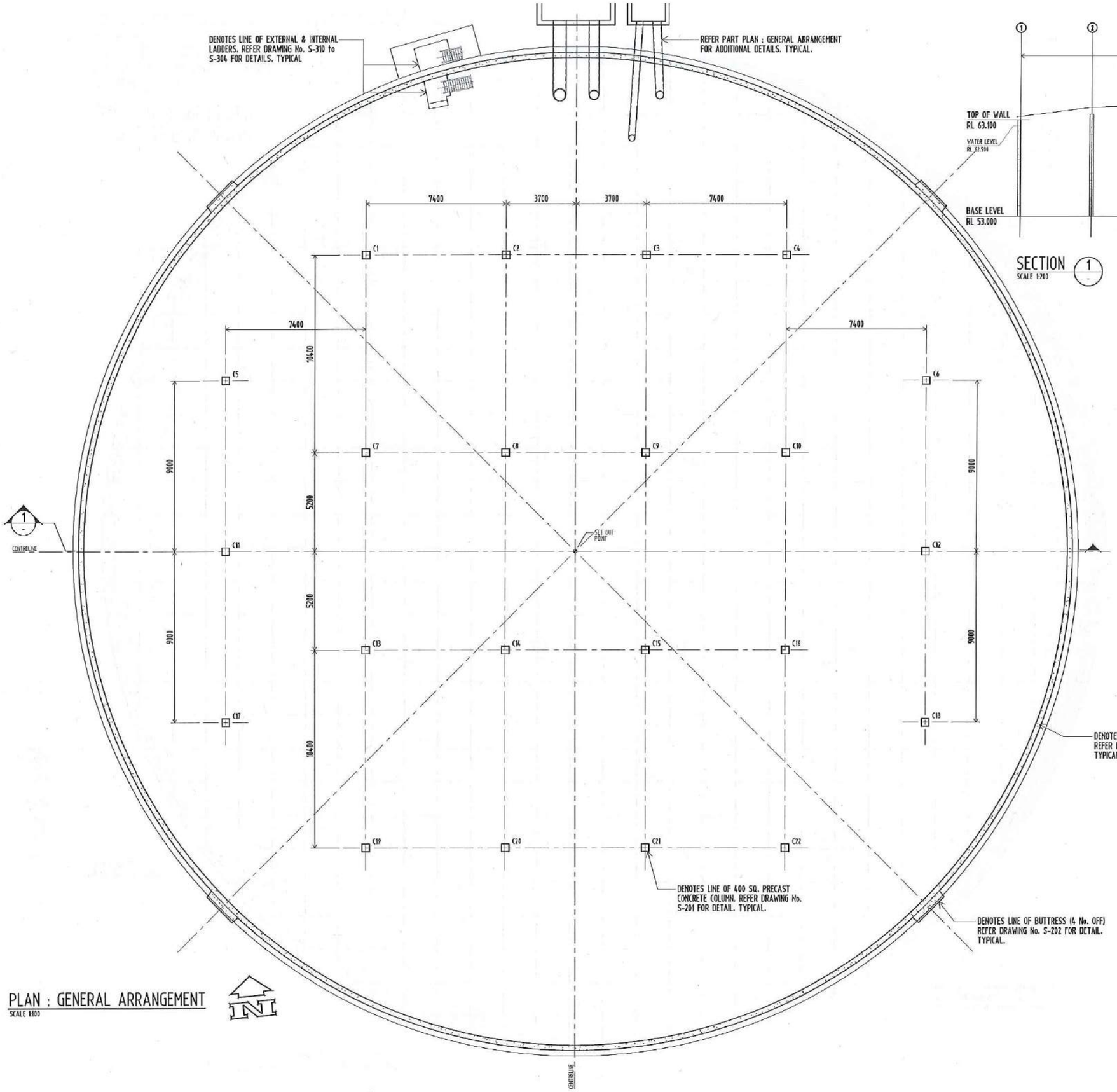

PLAN : GENERAL ARRANGEMENT
SCALE 1:100

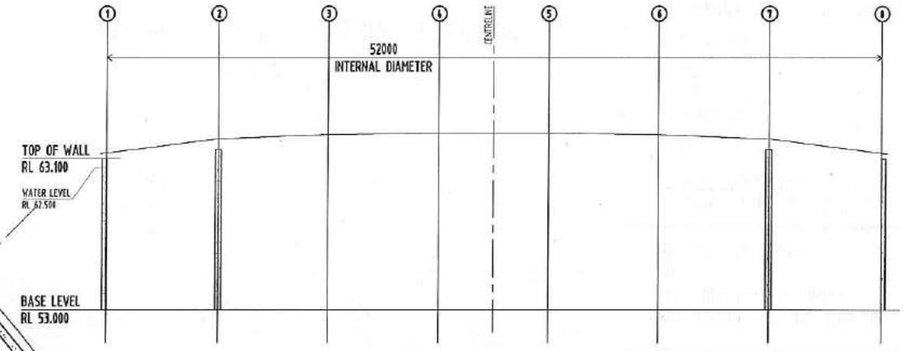

SECTION 1
SCALE 1:200

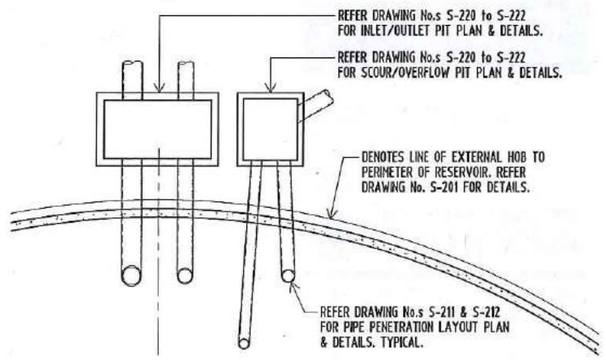

PART PLAN : GENERAL ARRANGEMENT
SCALE 1:100

REFER DRAWING No. S-401 FOR STRUCTURAL NOTES.

T1	ISSUED FOR TENDER	C.J.F.	17.02.17
	Amendment	By	Date

glynntucker consulting engineers
GLYNN TUCKER Pty Ltd
3/32 Balaclava Street
P.O. Box 8284, Woolloongabba 4102
t : 07 3839 1238
f : 07 3832 5573
e : brisbane@glynntucker.com.au
www.glynntucker.com.au
Also at Townsville
t : 07 4772 4222, f : 07 4721 1968

DOUGLAS SHIRE COUNCIL

Project
PORT DOUGLAS WATER STORAGE AND TRUNK WATER SUPPLY FOR DOUGLAS SHIRE COUNCIL

Sheet Title GENERAL ARANGEMENT PLAN

Drawn	C.R.P.	
Date	OCTOBER 2012	
Scale	1:100	A1 SHEET
Checked	RAG	
Approved	C.R. Morrow	MIEAust RPEQ 4953
Project No. 24021	Drg No. S-101	T1

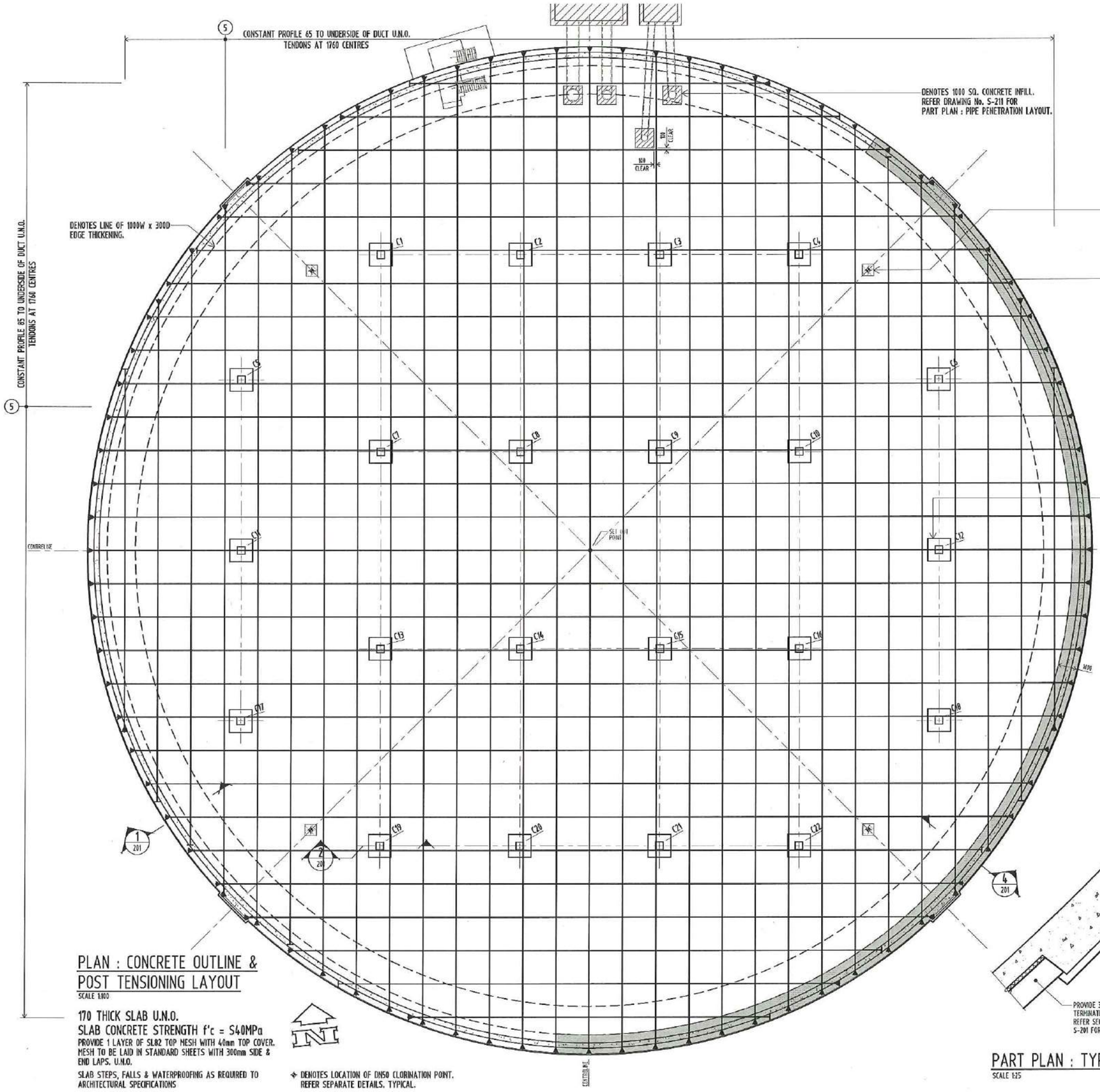

PLAN : CONCRETE OUTLINE & POST TENSIONING LAYOUT

SCALE 1:100

170 THICK SLAB U.N.O.
SLAB CONCRETE STRENGTH f'c = S40MPa
PROVIDE 1 LAYER OF SL82 TOP MESH WITH 40mm TOP COVER. MESH TO BE LAID IN STANDARD SHEETS WITH 300mm SIDE & END LAPS. U.N.O.

SLAB STEPS, FALLS & WATERPROOFING AS REQUIRED TO ARCHITECTURAL SPECIFICATIONS

✧ DENOTES LOCATION OF DN50 CLORINATION POINT. REFER SEPARATE DETAILS. TYPICAL.

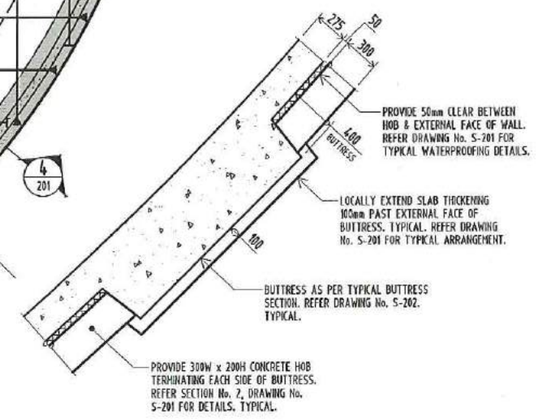

PART PLAN : TYPICAL OUTLINE AT BUTTRESS

SCALE 1:25

REFER DRAWING No. S-001 FOR STRUCTURAL NOTES.

PRESTRESSING NOTES

P1. Prestressing materials and procedures shall comply with the requirements of clauses 6.3 and 19.3 of AS 3600.
P2. Tendons shall consist of 12.7mm wire stress relieved super grade low relaxation strand having a minimum breaking load of 184kN per strand.
P3. All strands shall be identified as to coil and heat number. Records of tensile tests on each coil shall be kept and forwarded to the Consulting Engineer.
P4. All profile dimensions indicated are measured from the top of the soffit formwork to the u/s of duct, except at anchorages where dimensions are measured to the centre line of anchorage.

Denotes "active" dead end
Denotes live end
Denotes top stressing pair
(5) Denotes No. of strands per tendon

P5. The tolerance on tendon positions is 5mm. The ducts are to follow suitable smooth parabolic curves between the points shown, without sharp bends, kinks or any other sharp changes in direction.
P6. Both ducting and support chairs must be fixed securely to avoid flotation and horizontal displacement when concrete is placed.
P7. All duct joints shall be securely taped or sealed to prevent entry of slurry into ducts.
P8. No relocation of tendons shall occur without the approval of the structural engineer.
P9. Reinforcing steel shall be re-adjusted or relocated to ensure the specified location of the tendons and anchorages.
P10. The prestressing sub-contractor shall submit two copies of the working drawings to the structural engineer for approval.
P11. Strand projecting from anchorages shall be spray painted so the subsequent extension upon stressing can be clearly seen.
P12. Tendons shall be tensioned with an initial force of;
0.85 $F'p$ = 782kN for 5 strand tendons.
The force shall be determined from a calibrated and certified gauge.
P13. Tendon/strand extensions shall be recorded and forwarded to the Consulting Engineer together with other tensioning operation records.
P14. Ducts are to be pressure grouted as specified in clause 19.3.4.7 of AS 3600. Grout outlets to be provided at all high points and at anchorages.
P15. Formwork to remain fully propped until final stressing complete.
P16. Anchorage to be protected by approved epoxy coating. Anchorage recesses are to be filled with approved non-shrink mortar.

STRESSING SEQUENCE

P17. 24 hours after casting slab, stress each tendon to;
0.25 $F'p$ = 218 kN for 5 strand tendons.
P18. Final stressing shall not proceed until the concrete has reached a strength of $f'c$ = 25 MPa as defined by testing.
P19. The stressing sequence shall be provided by the contractor 1 week (min.) prior to stressing.

T1	ISSUED FOR TENDER	C.J.F.	17.02.17
	Amendment	By	Date

glynntucker
consulting engineers
GLYNN TUCKER Pty Ltd
3/32 Balaclava Street
P.O. Box 8284, Woolloongabba 4102
t : 07 3839 1238
f : 07 3832 5573
e : brisbane@glynntucker.com.au
www.glynntucker.com.au
Also at Townsville
t : 07 4772 4722, f : 07 4721 1968

DOUGLAS SHIRE COUNCIL

Project
PORT DOUGLAS WATER STORAGE AND TRUNK WATER SUPPLY FOR DOUGLAS SHIRE COUNCIL

Sheet Title
CONCRETE OUTLINE & POST TENSIONING LAYOUT PLAN

Drawn	C.R.P.
Date	OCTOBER 2012
Scale	1:100 A1 SHEET
Checked	R.A.Gilbert
Approved	E.J.de Monera NER Aust RPEQ 4953
Project No.	24021
Drg No.	S-200 T1

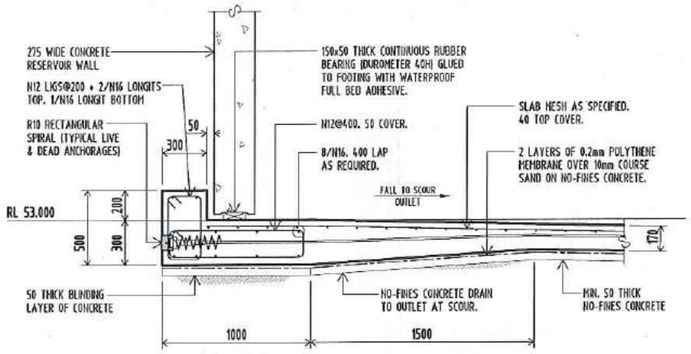

SECTION 2 S-200
SCALE 1:20

TYPICAL SLAB EDGE DETAIL

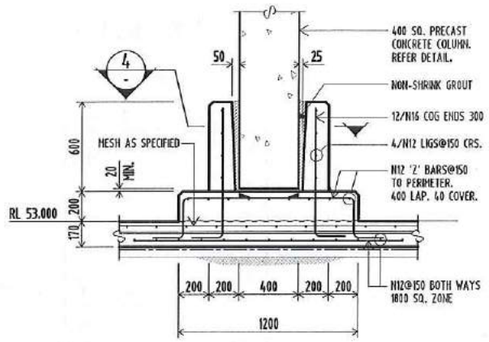

SECTION 3 S-200
SCALE 1:20

TYPICAL COLUMN BASE DETAIL

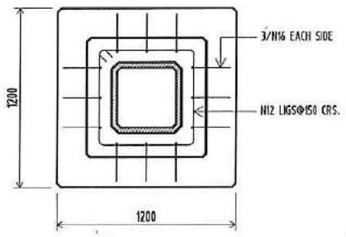

SECTION 4
SCALE 1:20

TYPICAL COLUMN BASE PLAN

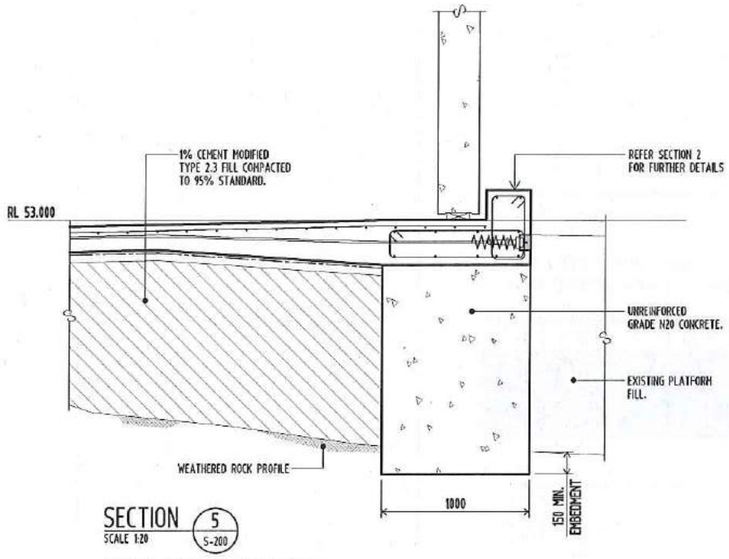

SECTION 5 S-200
SCALE 1:20

TYPICAL COLUMN BASE DETAIL
(IN FILL ZONE ONLY)

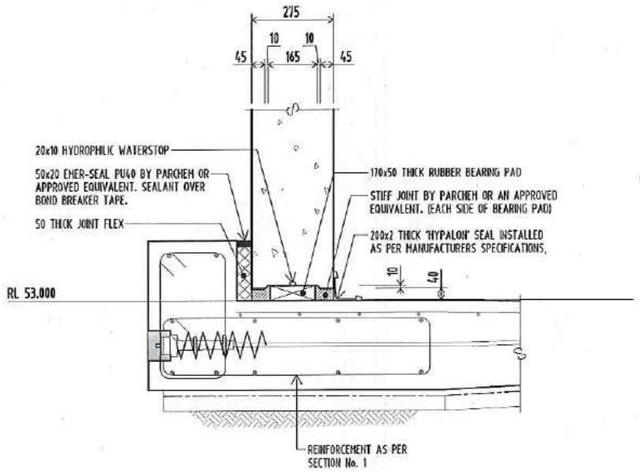

TYPICAL WATER PROOFING DETAIL
WALL SEGMENT
SCALE 1:10

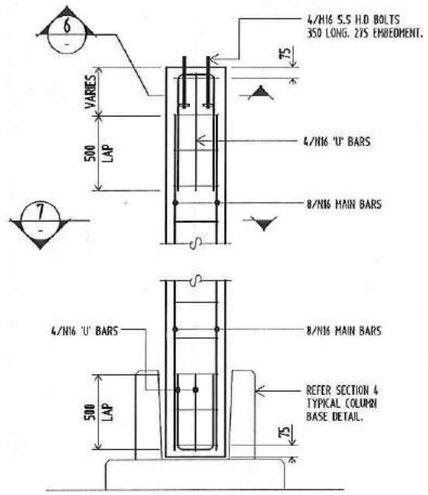

TYPICAL PRECAST COLUMN ELEVATION
SCALE 1:20

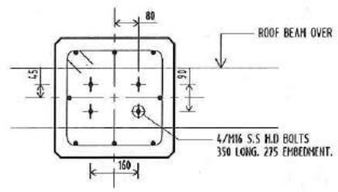

SECTION 6
SCALE 1:10

H.D. BOLT LAYOUT

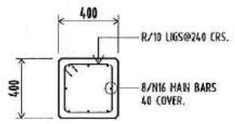

SECTION 7
SCALE 1:20

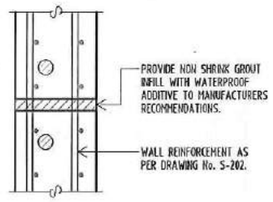

TYPICAL WATER PROOFING DETAIL
FORMWORK 'Z' BAR INFILL TO WALLS
SCALE 1:10

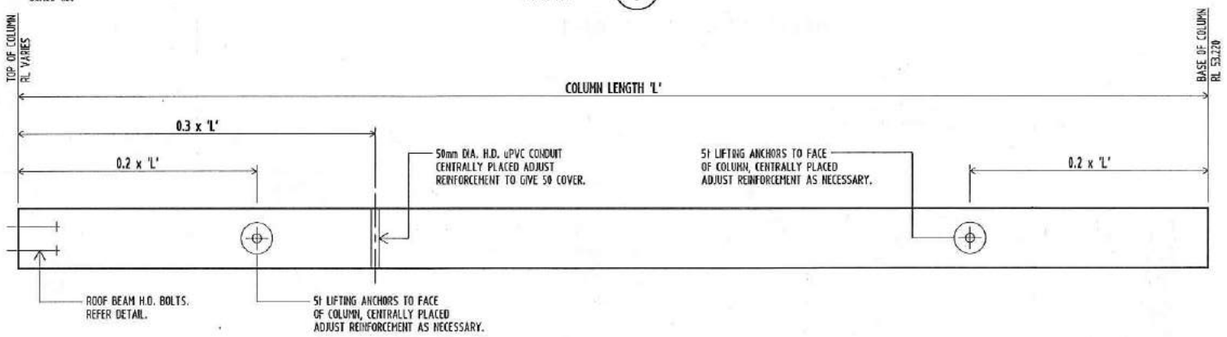

PRECAST COLUMN DETAIL
SCALE 1:20

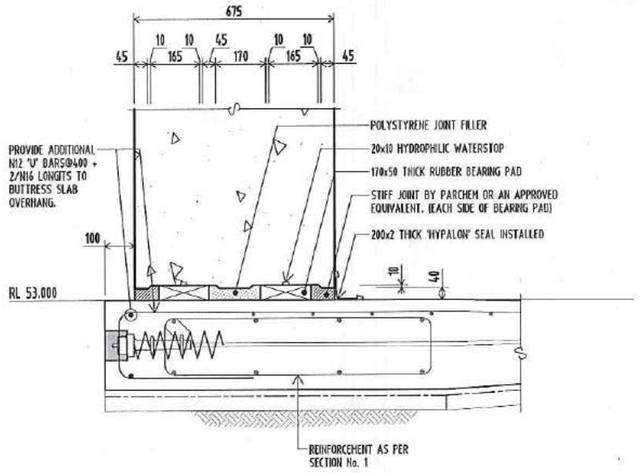

TYPICAL WATER PROOFING DETAIL
BUTTRESS SEGMENT
SCALE 1:10

TABLE No. 1 : TOP OF COLUMN RL'S

COLUMN	TOP OF COLUMN RL	COLUMN	TOP OF COLUMN RL
C1, C4, C19, C22	63.120	C7, C10, C13, C16	63.605
C2, C3, C20, C21	63.240	C8, C9, C14, C15	63.785
C5, C6, C17, C18	63.180	C11, C12	63.650

REFER DRAWING No. S-001 FOR STRUCTURAL NOTES.

T1	ISSUED FOR TENDER	C.J.F.	17.02.17
	Amendment	By	Date

glynntucker consulting engineers
GLYNN TUCKER Pty Ltd
3/32 Balaclava Street
P.O. Box 8284, Woolloongabba 4102
t : 07 3839 1238
f : 07 3832 5573
e : brisbane@glynntucker.com.au
www.glynntucker.com.au
Also at Townsville
t : 07 4721 4722, f : 07 4721 1968

DOUGLAS SHIRE COUNCIL

Project
PORT DOUGLAS WATER STORAGE AND TRUNK WATER SUPPLY FOR DOUGLAS SHIRE COUNCIL

Sheet Title CONCRETE & WALL SECTIONS : SHEET 1 OF 2

Drawn	C.R.P.	
Date	OCTOBER 2012	
Scale	1:100	A1 SHEET
Checked	R.A.G.	
Approved	C.R. Nunan	MIE Aust RPEQ 4953
Project No. 24021	Drg No. S-201 T1	

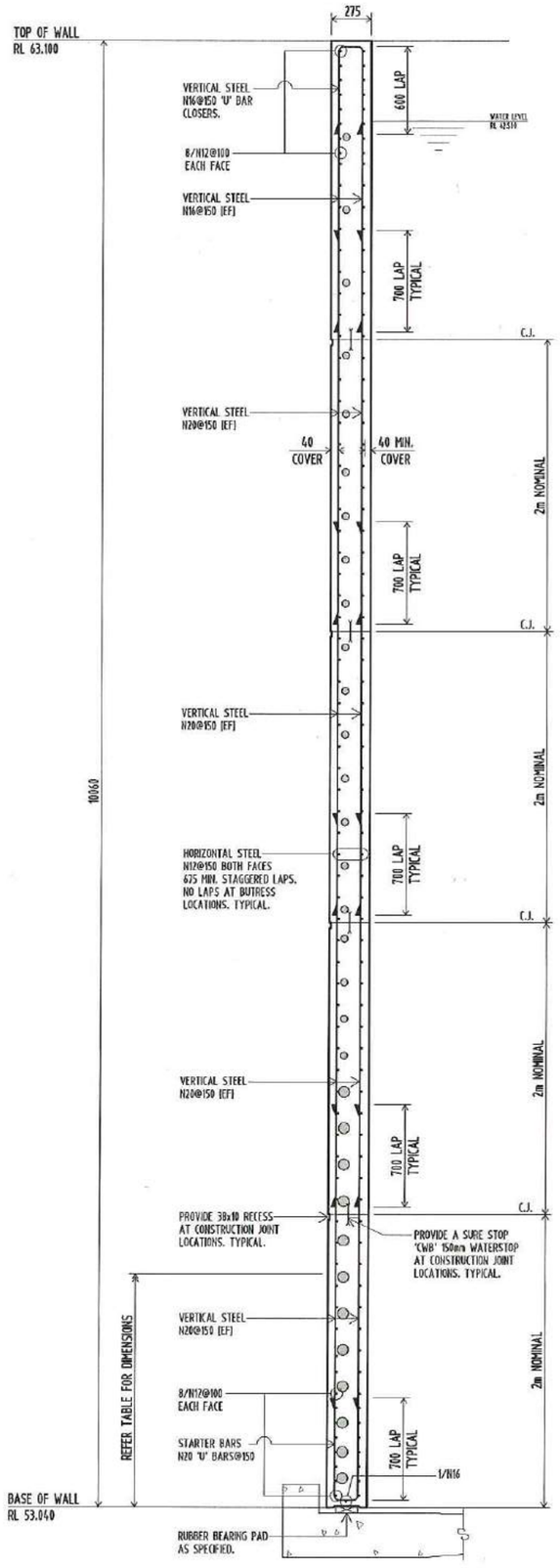

TYPICAL RESERVOIR WALL SECTION

SCALE 1:20

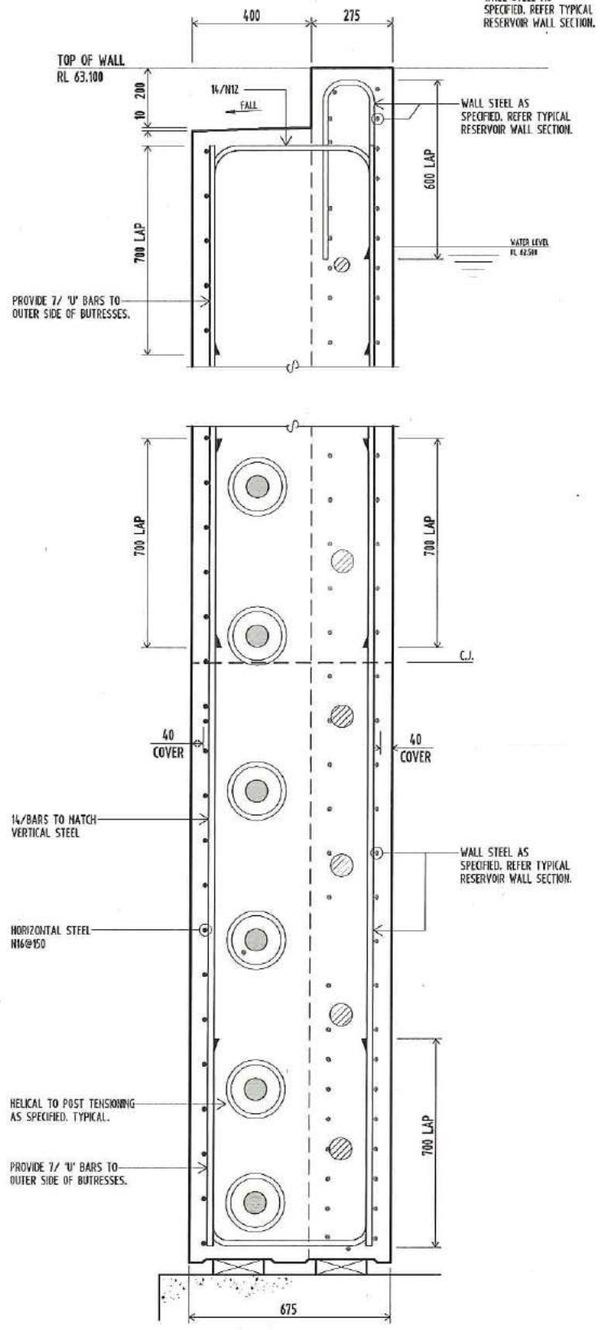

SECTION 8

SCALE 1:10

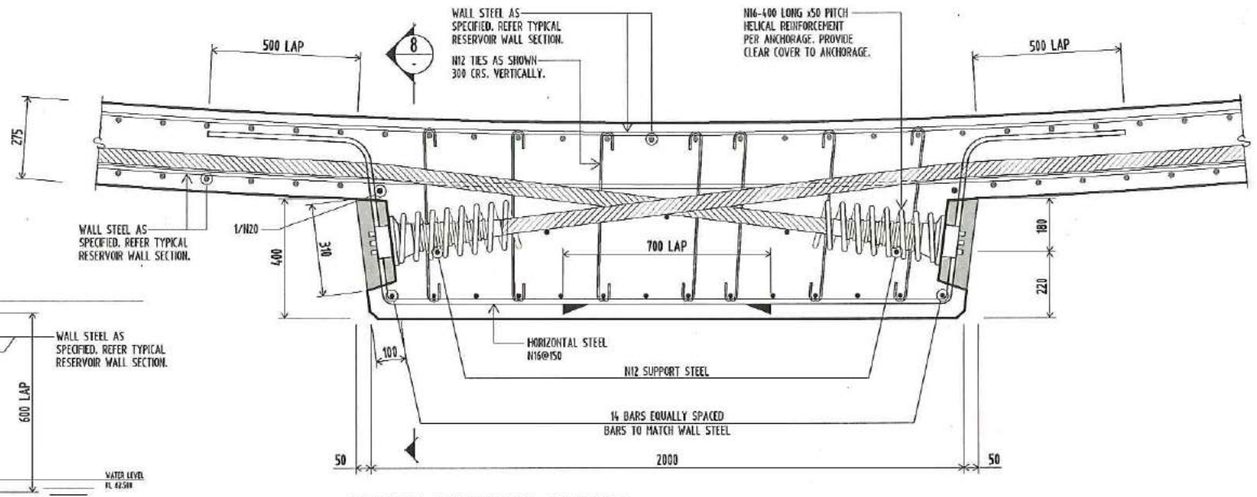

TYPICAL BUTTRESS SECTION

SCALE 1:10

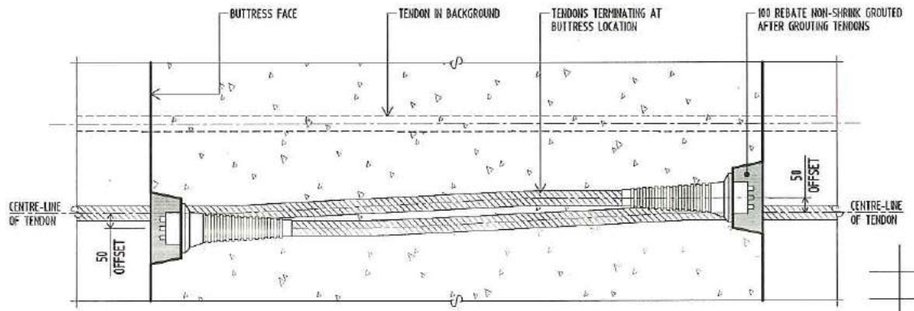

ELEVATION ON BUTTRESS

SCALE 1:10

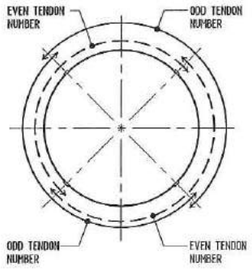

TENDON LOCALITY PLAN

SCALE N.T.S.

PRESTRESSING NOTES

WP1. Prestressing materials and procedures shall comply with the requirements of clauses 6.3 and 10.3 of AS 3600.

WP2. Tendons shall consist of 12.7mm wire stress relieved super grade low relaxation strand having a minimum breaking load of 184kN per strand.
Jacking load per 7-12.7mm Tendon shall be 1036kN.
Jacking load per 9-12.7mm Tendon shall be 1325kN.
Calculated strand extension at each jack before lock-off is ---mm.
Friction loss Co-efficients ;
A.) Friction 0.20
B.) Wobble Factor 0.016
C.) Anchorage 6mm
Each circumferential tendon shall consist of two 180° segment tendons at alternate levels and shall be anchored at 18° phases. Tendons shall be horizontal between anchorages and shall not be curved vertically.

WP3. All ducting must be fixed securely to avoid flotation and vertical displacement when concrete is placed.

WP4. All duct joints shall be securely taped or sealed to prevent entry of slurry into ducts.

WP5. Tendons shall be stressed in the order shown in the schedule of duct locations.

WP6. Clear cover to reinforcement shall be as shown.

WP7. Concrete in wall shall be mix Type S40. Refer specification.

WP8. Stressing shall not commence until either the last wall poured has been completed for not less than 14 days or the concrete has reached 31MPa.

WP10. Four buttresses shall be provided.

DUCT LOCATIONS TABLE

TENDON NUMBER	NUMBER OF STRANDS	MINIMUM DUCT ID (MM)	℄ HEIGHT FROM BOTTOM OF WALL	ORDER OF STRESSING
32	7-12.7mm	50	9400	22
31	7-12.7mm	50	8900	19
30	7-12.7mm	50	8400	9
29	7-12.7mm	50	7900	30
28	7-12.7mm	50	7500	18
27	7-12.7mm	50	7100	8
26	7-12.7mm	50	6800	24
25	7-12.7mm	50	6500	16
24	7-12.7mm	50	6200	6
23	7-12.7mm	50	5900	28
22	7-12.7mm	50	5600	14
21	7-12.7mm	50	5300	4
20	7-12.7mm	50	5000	26
19	7-12.7mm	50	4700	12
18	7-12.7mm	50	4400	2
17	7-12.7mm	50	4100	31
16	7-12.7mm	50	3900	10
15	7-12.7mm	50	3600	21
14	7-12.7mm	50	3350	32
13	7-12.7mm	50	3100	1
12	9-12.7mm	70	2850	11
11	9-12.7mm	70	2600	25
10	9-12.7mm	70	2350	3
9	9-12.7mm	70	2100	13
8	9-12.7mm	70	1830	27
7	9-12.7mm	70	1580	5
6	9-12.7mm	70	1330	15
5	9-12.7mm	70	1080	23
4	9-12.7mm	70	830	7
3	9-12.7mm	70	580	17
2	9-12.7mm	70	380	20
1	9-12.7mm	70	200	29

REFER DRAWING No. S-001 FOR STRUCTURAL NOTES.

T1	ISSUED FOR TENDER	C.J.F.	17.02.17
	Amendment	By	Date

glynntucker
consulting engineers
GLYNN TUCKER Pty Ltd
3/62 Balaclava Street
P.O. Box 8284, Woolloongabba 4102
t : 07 3839 1238
f : 07 3832 5573
e : brisbane@glynntucker.com.au
www.glynntucker.com.au
Also at Townsville
t: 07 4772 4722, f: 07 4721 1968

DOUGLAS SHIRE COUNCIL

Project
PORT DOUGLAS WATER STORAGE
AND TRUNK WATER SUPPLY
FOR
DOUGLAS SHIRE COUNCIL

Sheet Title CONCRETE & WALL SECTIONS : SHEET 2 OF 2

Drawn	C.R.P.	
Date	OCTOBER 2012	
Scale	1:100	A1 SHEET
Checked	RAJah	
Approved	E.L. Nunnen	MIE Aust RPEQ 4953
Project No.	24021	Drg No. S-202 T1

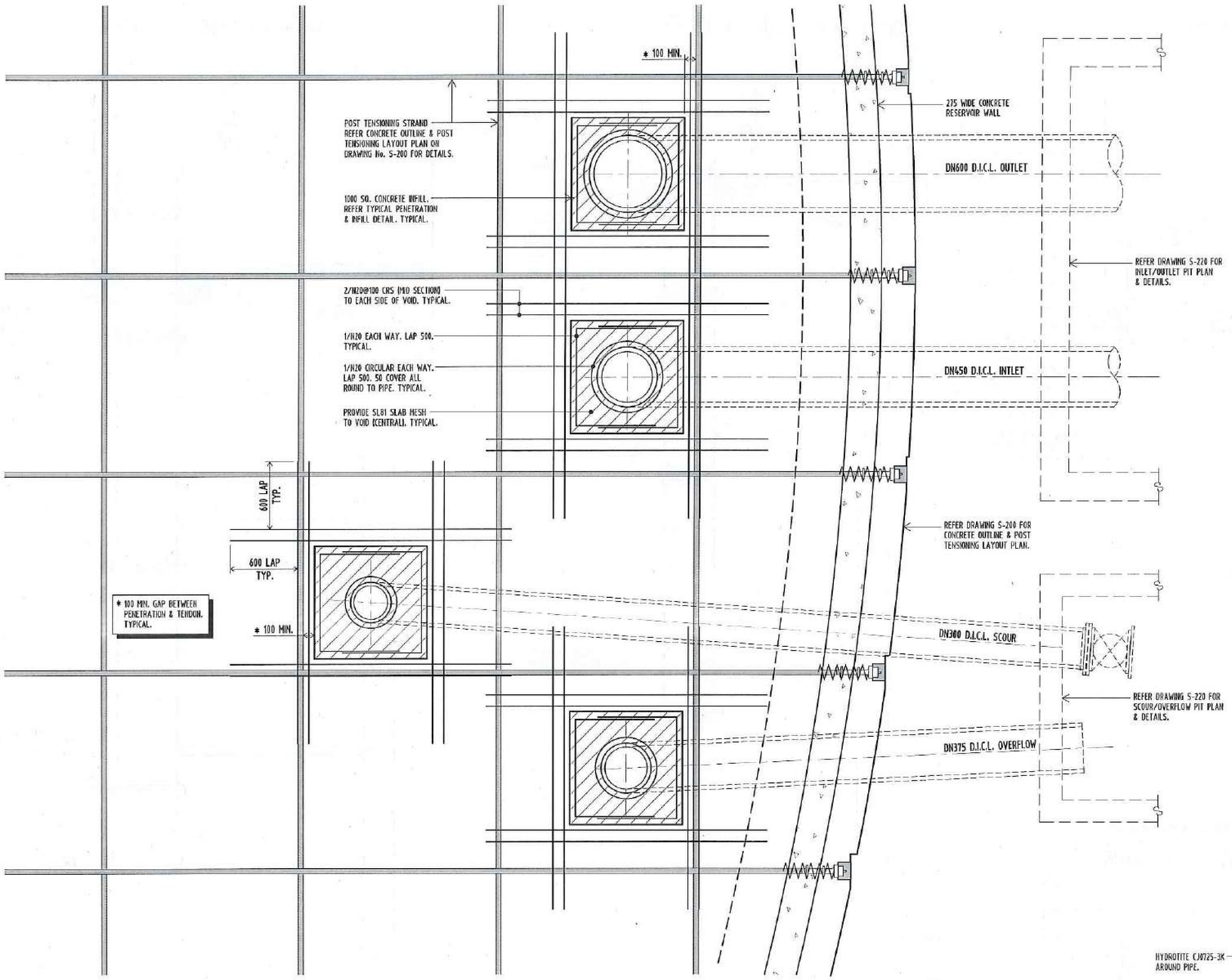

PART PLAN : PIPE PENETRATION LAYOUT

SCALE 1:20

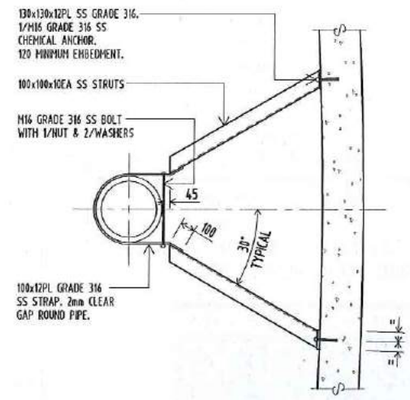

TYPICAL PIPE BRACKET DETAIL

SCALE 1:20

NOTE : REFER EMPOWER DOCUMENTATION FOR SCHEDULE OF PIPES & FITTINGS. TYPICAL.

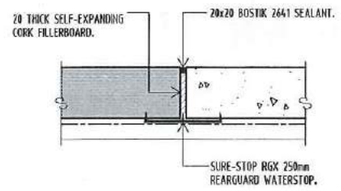

TYPICAL JOINT DETAIL

SCALE 1:10

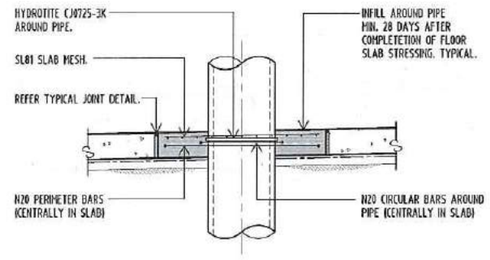

TYPICAL PENETRATION AND INFILL DETAIL

SCALE 1:20

REFER DRAWING No. S-401 FOR STRUCTURAL NOTES.

T1	ISSUED FOR TENDER	C.J.F.	17.02.17
	Amendment	By	Date

glynntucker consulting engineers
GLYNN TUCKER Pty Ltd
3/32 Balaclava Street
P.O. Box 8284, Woolloongabba 4102
t : 07 3839 1239
f : 07 3832 5573
e : brisbane@glynntucker.com.au
www.glynntucker.com.au
Also at Townsville
t : 07 4772 4299, f : 07 4721 1968

DOUGLAS SHIRE COUNCIL

Project
PORT DOUGLAS WATER STORAGE AND TRUNK WATER SUPPLY FOR DOUGLAS SHIRE COUNCIL

Sheet Title PART PLAN : PIPE PENETRATION LAYOUT & DETAILS

Drawn	C.R.P.
Date	MARCH 2013
Scale	1:20, 1:10 — A1 SHEET
Checked	RAGH
Approved	C.R. Murray — MIE Aust RPEQ 4953
Project No.	24021
Drg No.	S-211 T1

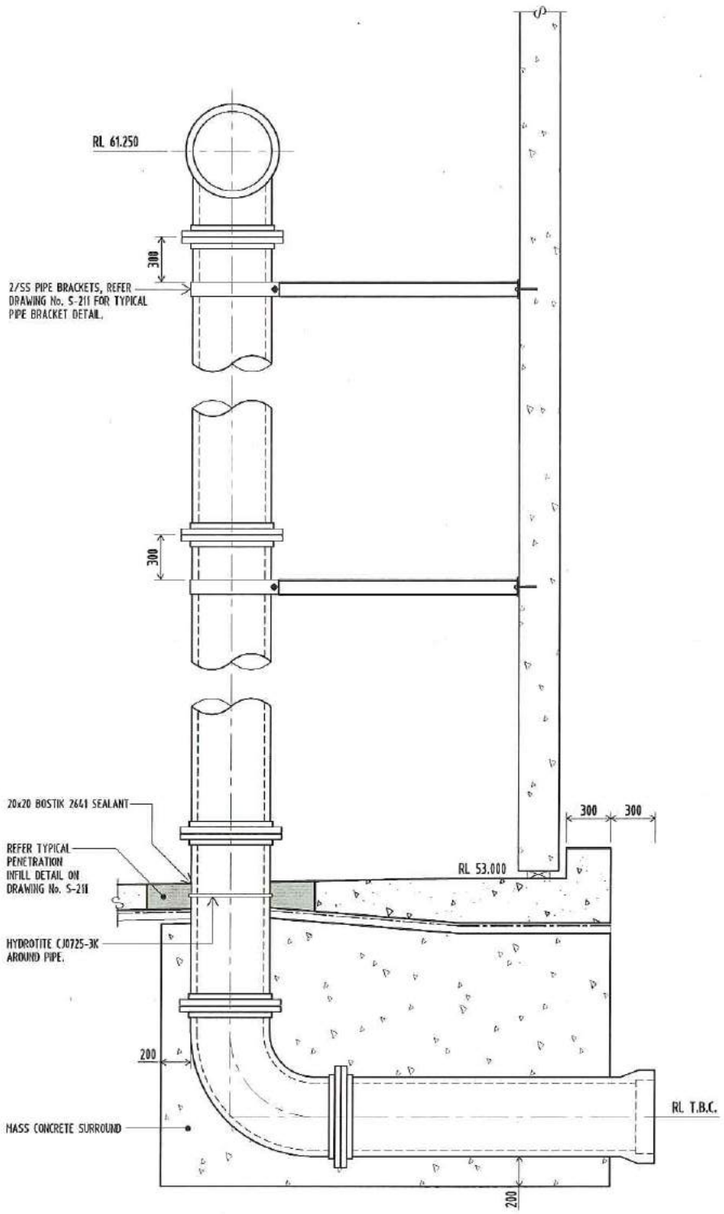

DN450 D.I.C.L. INLET ELEVATION

SCALE 1:20

NOTE: MASS CONCRETE SURROUND SHALL BE N20.

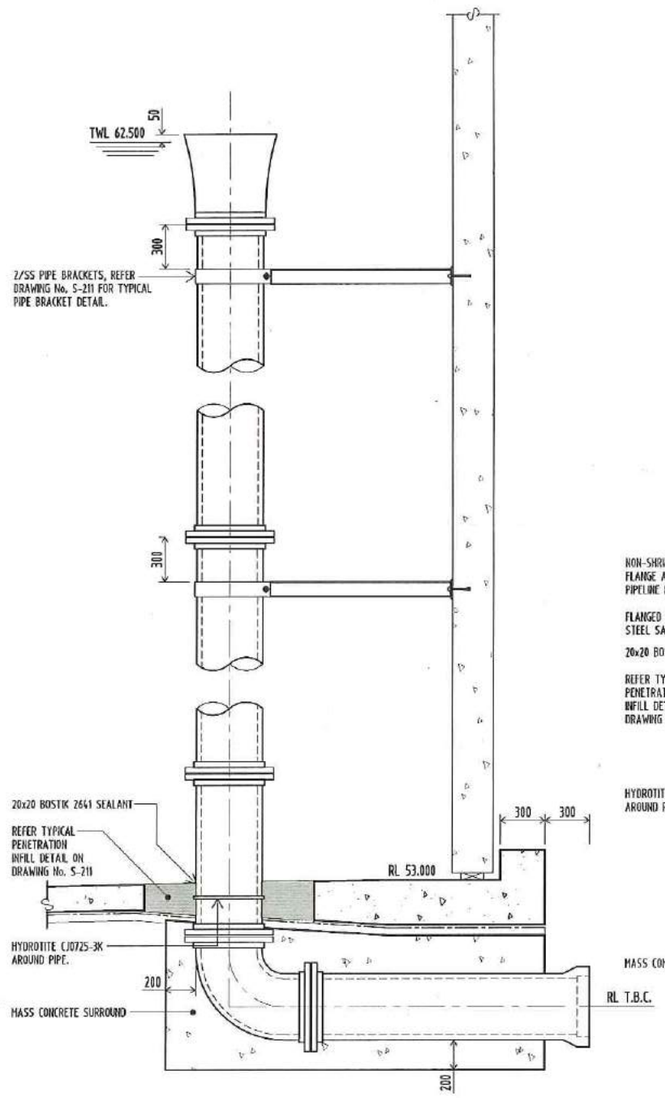

DN375 D.I.C.L. OVERFLOW ELEVATION

SCALE 1:20

NOTE: MASS CONCRETE SURROUND SHALL BE N20.

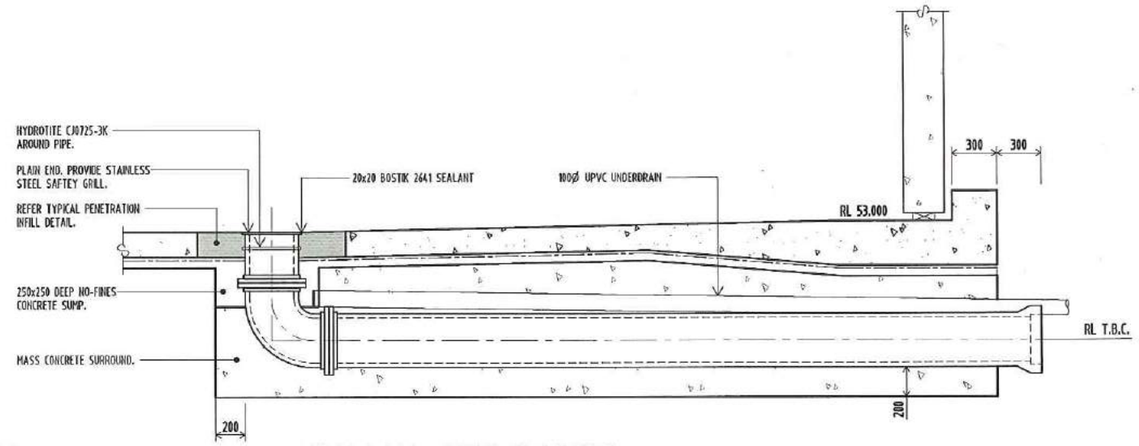

DN300 D.I.C.L. SCOUR ELEVATION

SCALE 1:20

NOTE: MASS CONCRETE SURROUND SHALL BE N20.

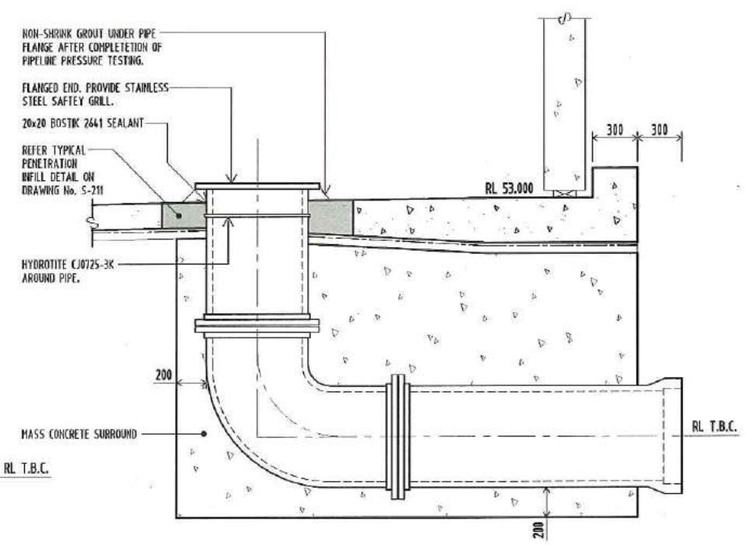

DN600 D.I.C.L. OUTLET ELEVATION

SCALE 1:20

NOTE: MASS CONCRETE SURROUND SHALL BE N20.

NOTE : REFER EMPOWER DOCUMENTATION FOR SCHEDULE OF PIPES & FITTINGS. TYPICAL.

T1	ISSUED FOR TENDER	C.J.F.	17.02.17
	Amendment	By	Date

glynntucker consulting engineers
GLYNN TUCKER Pty Ltd
3/32 Balaclava Street
P.O. Box 8284, Woolloongabba 4102
t : 07 3830 1238
f : 07 3832 5573
e : brisbane@glynntucker.com.au
www.glynntucker.com.au
Also at Townsville
t: 07 4772 4722, f: 07 4721 1068

DOUGLAS SHIRE COUNCIL

Project
PORT DOUGLAS WATER STORAGE AND TRUNK WATER SUPPLY FOR DOUGLAS SHIRE COUNCIL

Sheet Title PIPE PENETRATION ELEVATIONS

Drawn	C.R.P.
Date	MARCH 2013
Scale	1:20, 1:10 — A1 SHEET
Checked	
Approved	MIE Aust RPEQ 4953
Project No.	24021
Drg No.	S-212 T1

REFER DRAWING No. S-001 FOR STRUCTURAL NOTES.

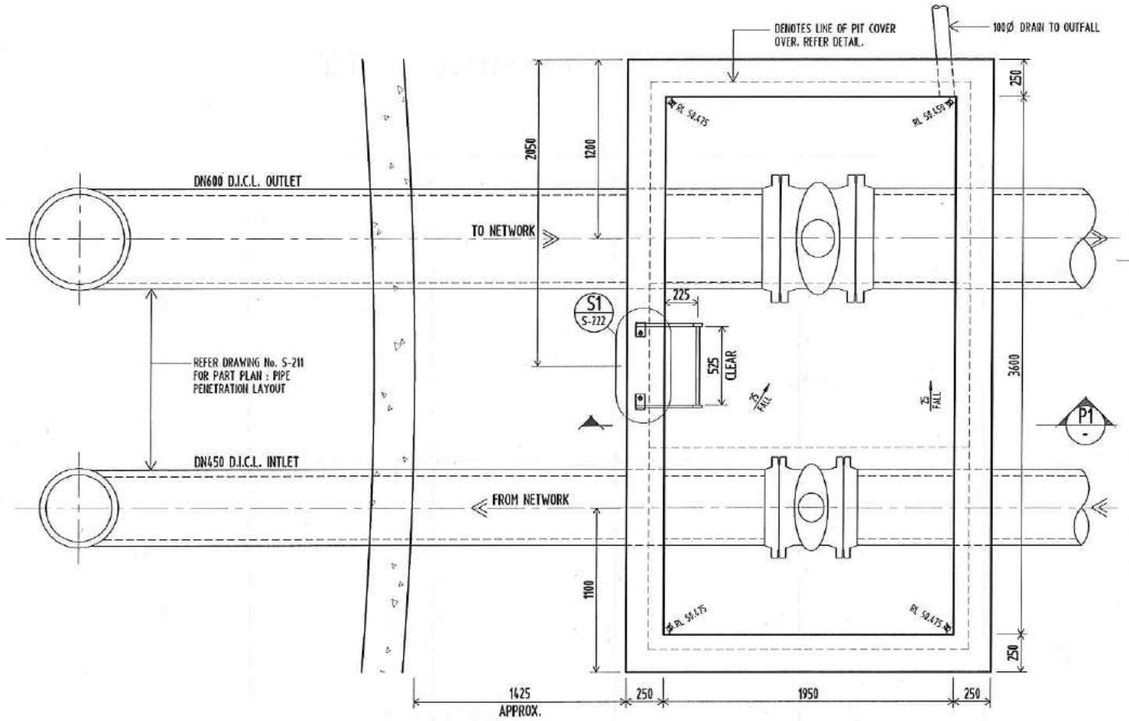

PLAN - INLET/OUTLET PIT
SCALE 1:20

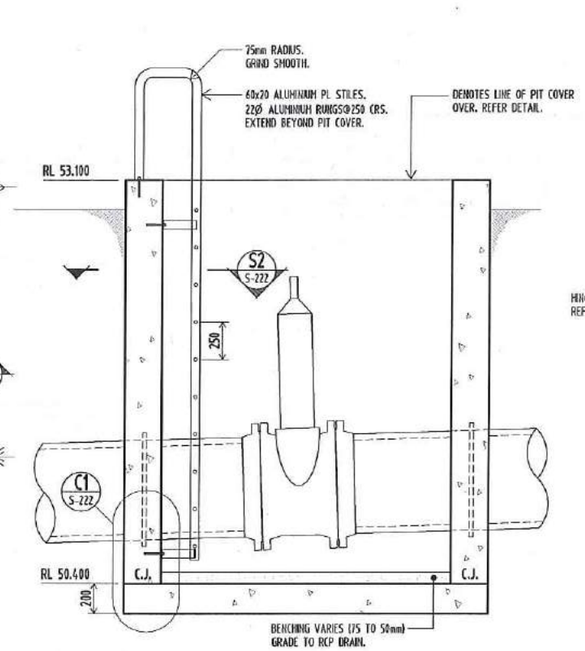

SECTION P1
SCALE 1:20

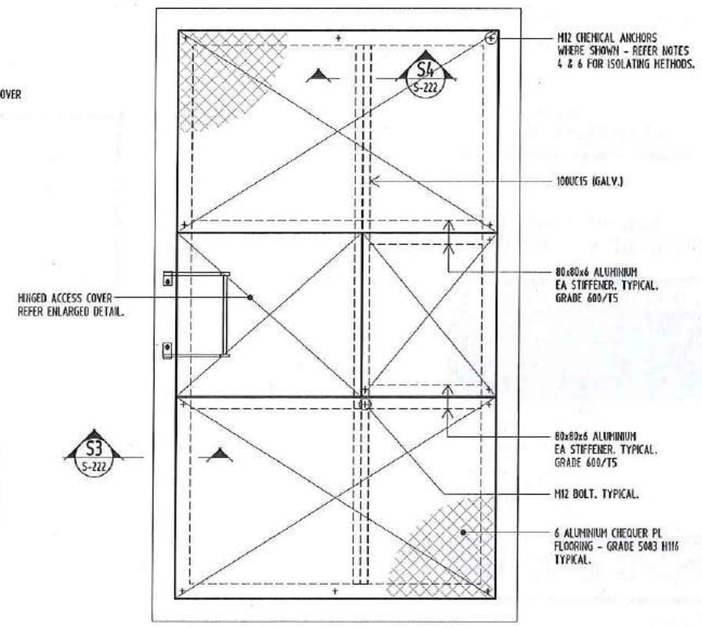

INLET/OUTLET PIT COVERS
SCALE 1:20

NOTE : PROVIDE THRUST FLANGE TO ALL MAIN PIPEWORK WALL PENETRATIONS. REFER EMPOWER ENGINEERS DOCUMENTATION FOR SCHEDULE OF PIPES & FITTINGS. TYPICAL.

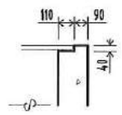

SECTION P4
SCALE 1:20

SCOUR OVERFLOW PIT
EDGE REBATE DETAIL

NOTES

1. DESIGN LIVE LOAD 1.0 kPa.
2. ALL WELDS 6mm CFW U.N.O.
3. PLATE TO ANGLE WELDS - WELD 100 MISS 200 PLATE TO EDGE.
4. ISOLATE ALUMINIUM FROM SS WITH SUITABLE NEOPRENE WASHERS AND SLEEVES.
5. WELDING OF ALUMINIUM SHALL BE IN ACCORDANCE WITH A.S. 1665 CATAGORY 'B' USING MIG/TIG PROCESS WITH 5356 ALLOY FILLER ROAD.
6. ALUMINIUM IN CONTACT WITH CONCRETE OR GALVANISED STEELWORK, ISOLATE WITH HEAVY COATING OF BITUMEN PAINT.

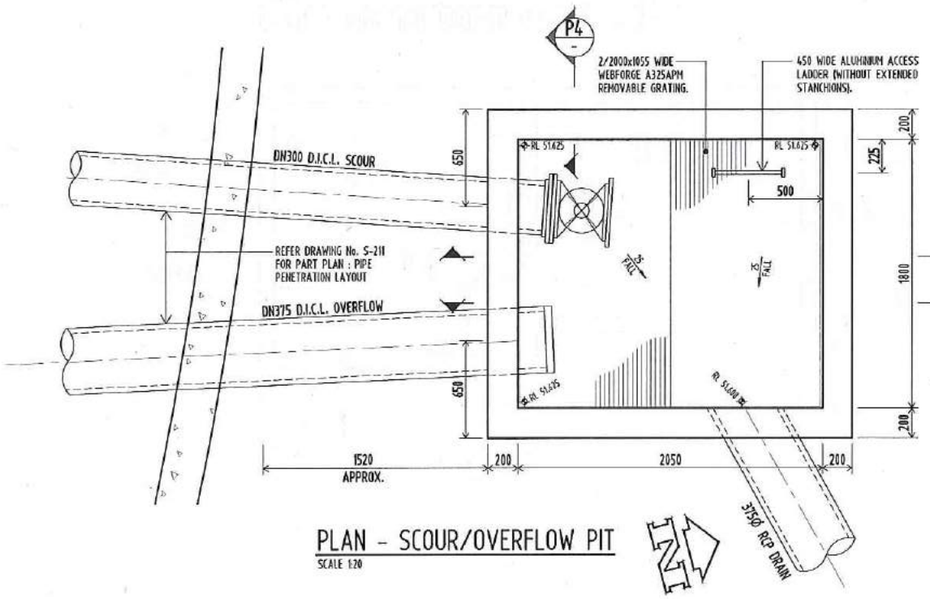

PLAN - SCOUR/OVERFLOW PIT
SCALE 1:20

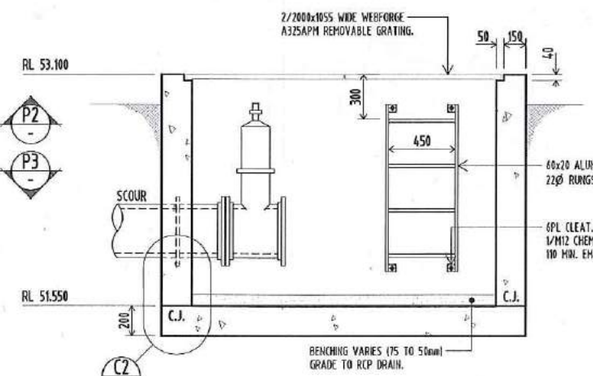

SECTION P2
SCALE 1:20

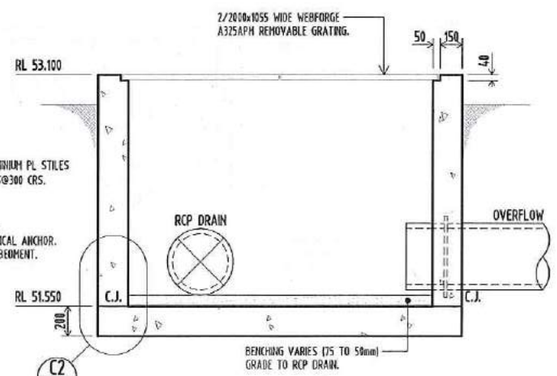

SECTION P3
SCALE 1:20

REFER DRAWING No. S-001 FOR STRUCTURAL NOTES.

T1	ISSUED FOR TENDER	D.A.R.	17.02.17
	Amendment	By	Date

glynntucker consulting engineers
GLYNN TUCKER Pty Ltd
3/32 Balaclava Street
P.O. Box 8284, Woolloongabba 4102
t : 07 3839 1236
f : 07 3832 5573
e : brisbane@glynntucker.com.au
www.glynntucker.com.au
Also at Townsville
t : 07 4772 4722, f : 07 4721 1966

DOUGLAS SHIRE COUNCIL

Project
PORT DOUGLAS WATER STORAGE AND TRUNK WATER SUPPLY FOR DOUGLAS SHIRE COUNCIL

Sheet Title INLET/OUTLET & SCOUR/ OVERFLOW PIT DETAILS

Drawn	C.R.P.
Date	MARCH 2013
Scale	1:20 A1 SHEET
Checked	R.A.S.
Approved	C.R.P. MIE Aust RPEQ 4953
Project No.	24021
Drg No.	S-220 T1

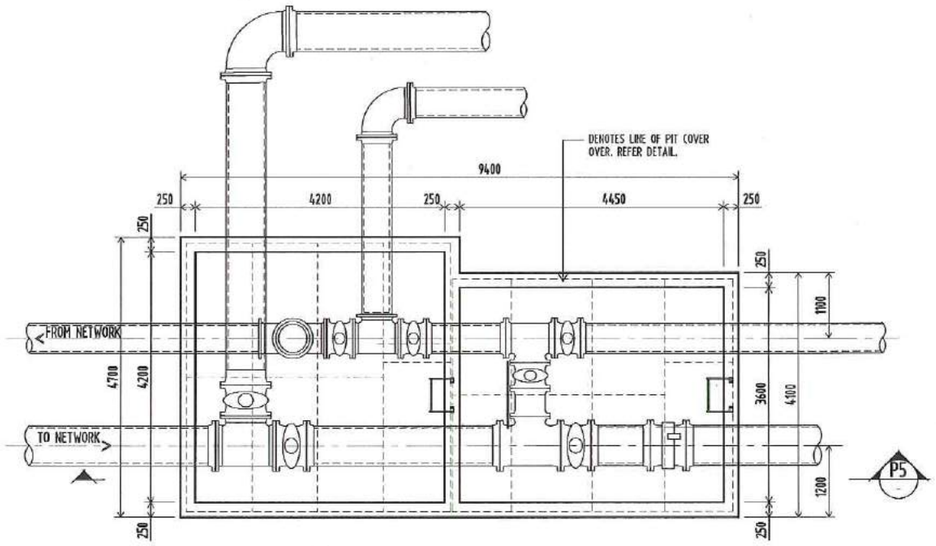

PLAN - JUNCTION FLOWMETER PIT

SCALE 1:50

NOTE : REFER DRAWING No. S-100 FOR LOCATION

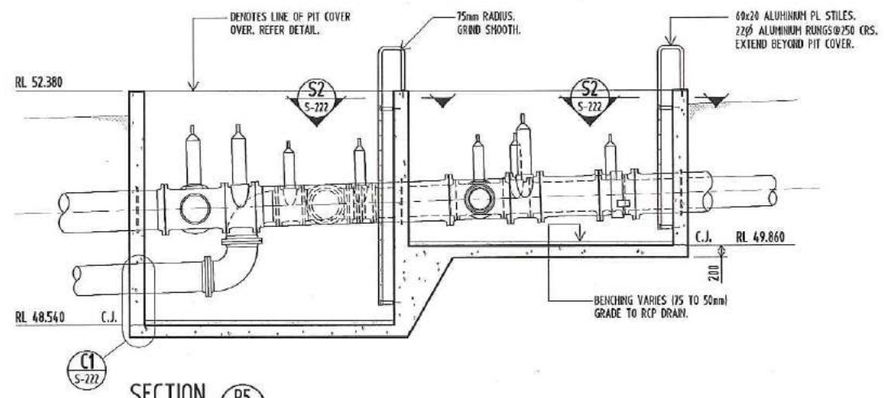

SECTION P5

SCALE 1:50

NOTE : PROVIDE THRUST FLANGE TO ALL MAIN PIPEWORK WALL PENETRATIONS. REFER EMPOWER ENGINEERS DOCUMENTATION FOR SCHEDULE OF PIPES & FITTINGS. TYPICAL.

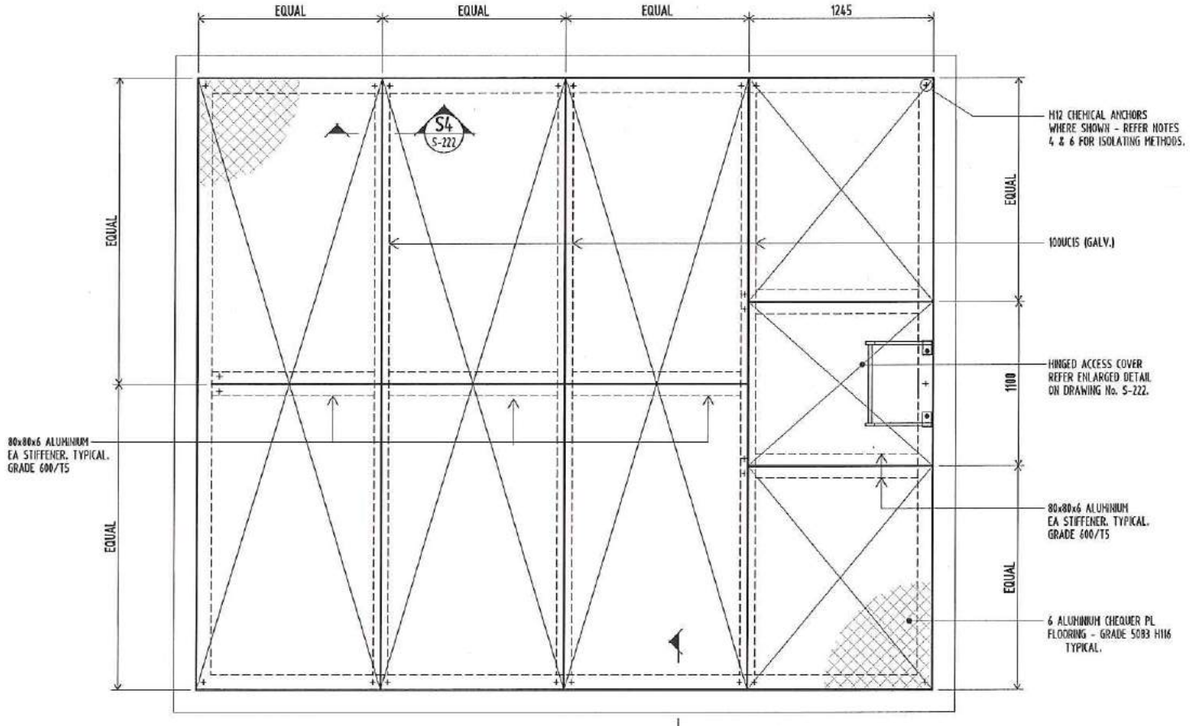

JUNCTION/FLOWMETER PIT COVERS

SCALE 1:20

S3 S-222

NOTES

1. DESIGN LIVE LOAD 1.0 kPa.
2. ALL WELDS 6mm CFW U.N.O.
3. PLATE TO ANGLE WELDS - WELD 100 MISS 200 PLATE TO EDGE.
4. ISOLATE ALUMINIUM FROM SS WITH SUITABLE NEOPRENE WASHERS AND SLEEVES.
5. WELDING OF ALUMINIUM SHALL BE IN ACCORDANCE WITH A.S. 1665 CATAGORY 'B' USING MIG/TIG PROCESS WITH 5356 ALLOY FILLER ROAD.
6. ALUMINIUM IN CONTACT WITH CONCRETE OR GALVANISED STEELWORK, ISOLATE WITH HEAVY COATING OF BITUMEN PAINT.

REFER DRAWING No. S-001 FOR STRUCTURAL NOTES.

T1	ISSUED FOR TENDER	D.A.R.	17.02.17
	Amendment	By	Date

glynntucker consulting engineers

GLYNN TUCKER Pty Ltd
3/32 Balaclava Street
P.O. Box 8284, Woolloongabba 4102
t : 07 3839 1238
f : 07 3832 5573
e : brisbane@glynntucker.com.au
www.glynntucker.com.au
Also at Townsville
t : 07 4772 4722, f : 07 4721 1068

DOUGLAS SHIRE COUNCIL

Project
PORT DOUGLAS WATER STORAGE AND TRUNK WATER SUPPLY FOR DOUGLAS SHIRE COUNCIL

Sheet Title JUNCTION/FLOWMETER PIT DETAILS

Drawn	C.R.P	
Date	MARCH 2013	
Scale	1:50, 1:20	A1 SHEET
Checked	R.A.G.	
Approved	E.V. Munro	MIE Aust RPEQ 4953
Project No. 24021	Drg No. S-221	T1

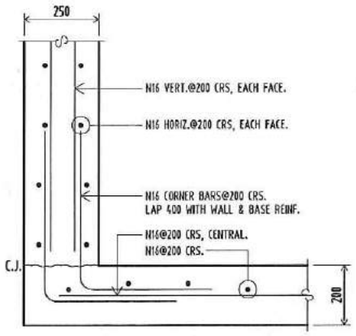

DETAIL C1 / S-220
SCALE 1:10

250 WALL TO 200 BASE DETAIL

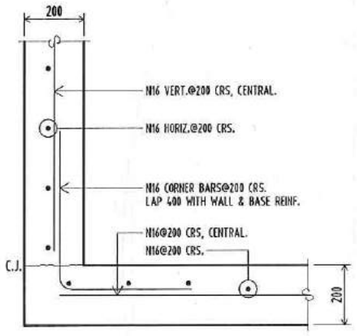

DETAIL C2 / S-220
SCALE 1:10

TYPICAL BASE TO WALL DETAIL

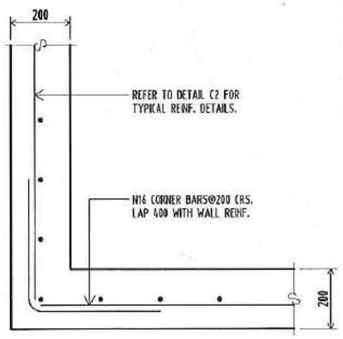

TYPICAL 200TH. WALL CORNER DE
SCALE 1:10

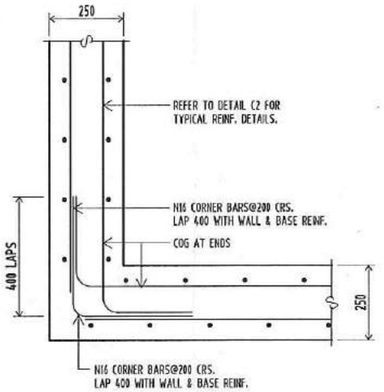

TYPICAL 250TH. WALL CORNER DETAIL
SCALE 1:10

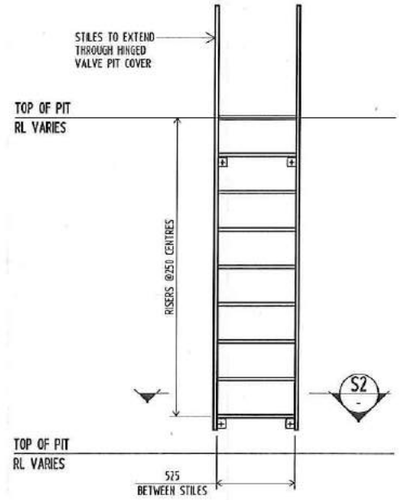

ELEVATION : TYPICAL ACCESS LADDER
SCALE 1:20

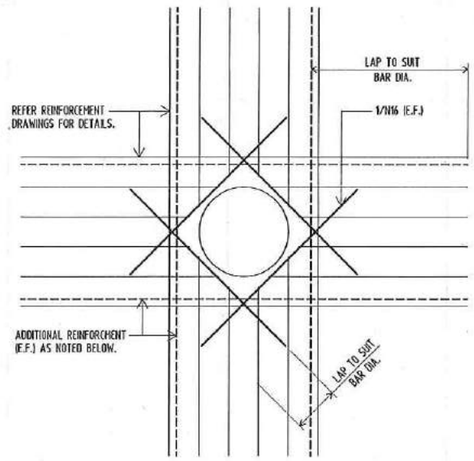

ELEVATION : TYPICAL PENETRATION DETAIL
SCALE 1:20

ADDITIONAL REINFORCEMENT TO BE EQUIVALENT TO BARS CUT FOR PENETRATION :

1 BAR CUT (REPLACE WITH 1 BAR EACH SIDE E.F.)
2 BAR CUT (REPLACE WITH 2 BAR EACH SIDE E.F.)
3 BAR CUT ETC.

BAR SIZE	LAP LENGTH
N12	400
N16	500
N20	700
N24	800
N28	1050

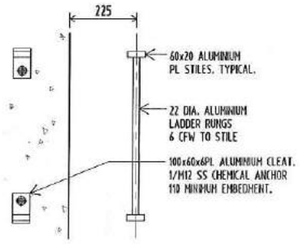

DETAIL S1 / S-220
SCALE 1:20

TYPICAL STAIR FIXING
TO TOP OF WALL

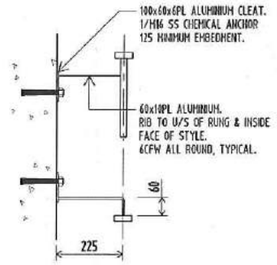

DETAIL S2 / S-220
SCALE 1:20

TYPICAL STAIR FIXING
TO SIDE OF WALL

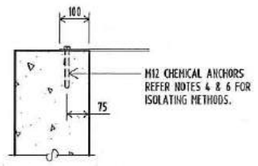

SECTION S3 / S-220
SCALE 1:10

TYPICAL ACCESS COVER
TO WALL CONNECTION

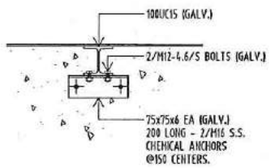

SECTION S4 / S-220
SCALE 1:10

TYPICAL SUPPORT BEAM
TO WALL CONNECTION

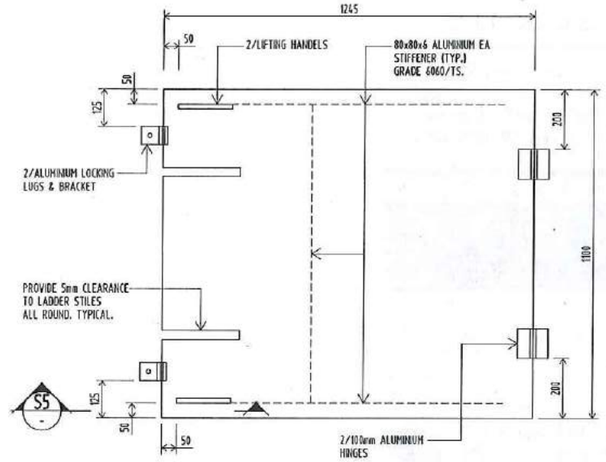

HINGED ACCESS COVER
SCALE 1:10

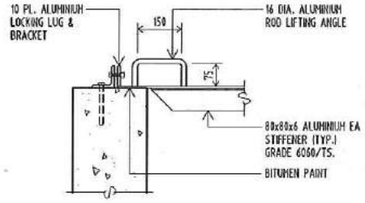

SECTION S5 / -
SCALE 1:10

TYPICAL ACCESS COVER
TO WALL CONNECTION

NOTES

1. DESIGN LIVE LOAD 1.0 kPa.
2. ALL WELDS 6mm CFW U.N.O.
3. PLATE TO ANGLE WELDS - WELD 100 MSS 200 PLATE TO EDGE.
4. ISOLATE ALUMINIUM FROM SS WITH SUITABLE NEOPRENE WASHERS AND SLEEVES.
5. WELDING OF ALUMINIUM SHALL BE IN ACCORDANCE WITH A.S. 1665 CATAGORY 'B' USING MIG/TIG PROCESS WITH 5356 ALLOY FILLER ROAD.
6. ALUMINIUM IN CONTACT WITH CONCRETE OR GALVANISED STEELWORK, ISOLATE WITH HEAVY COATING OF BITUMEN PAINT.

REFER DRAWING No. S-401 FOR STRUCTURAL NOTES.

T1	ISSUED FOR TENDER	D.A.R.	17.02.17
	Amendment	By	Date

glynntucker consulting engineers
GLYNN TUCKER Pty Ltd
3/32 Balaclava Street
P.O. Box 8284, Woolloongabba 4102
t : 07 3839 1238
f : 07 3832 5573
e : brisbane@glynntucker.com.au
www.glynntucker.com.au
Also at Townsville
t : 07 4772 4722, f : 07 4721 1968

DOUGLAS SHIRE COUNCIL

Project
PORT DOUGLAS WATER STORAGE
AND TRUNK WATER SUPPLY
FOR
DOUGLAS SHIRE COUNCIL

Sheet Title PIT DETAILS SHEET

Drawn	C.R.P.
Date	MARCH 2013
Scale	1:20, 1:10 — A1 SHEET
Checked	R.A.G.
Approved	E.S. Morrow — MIE Aust RPEQ 4953
Project No.	24021
Drg No.	S-222 T1

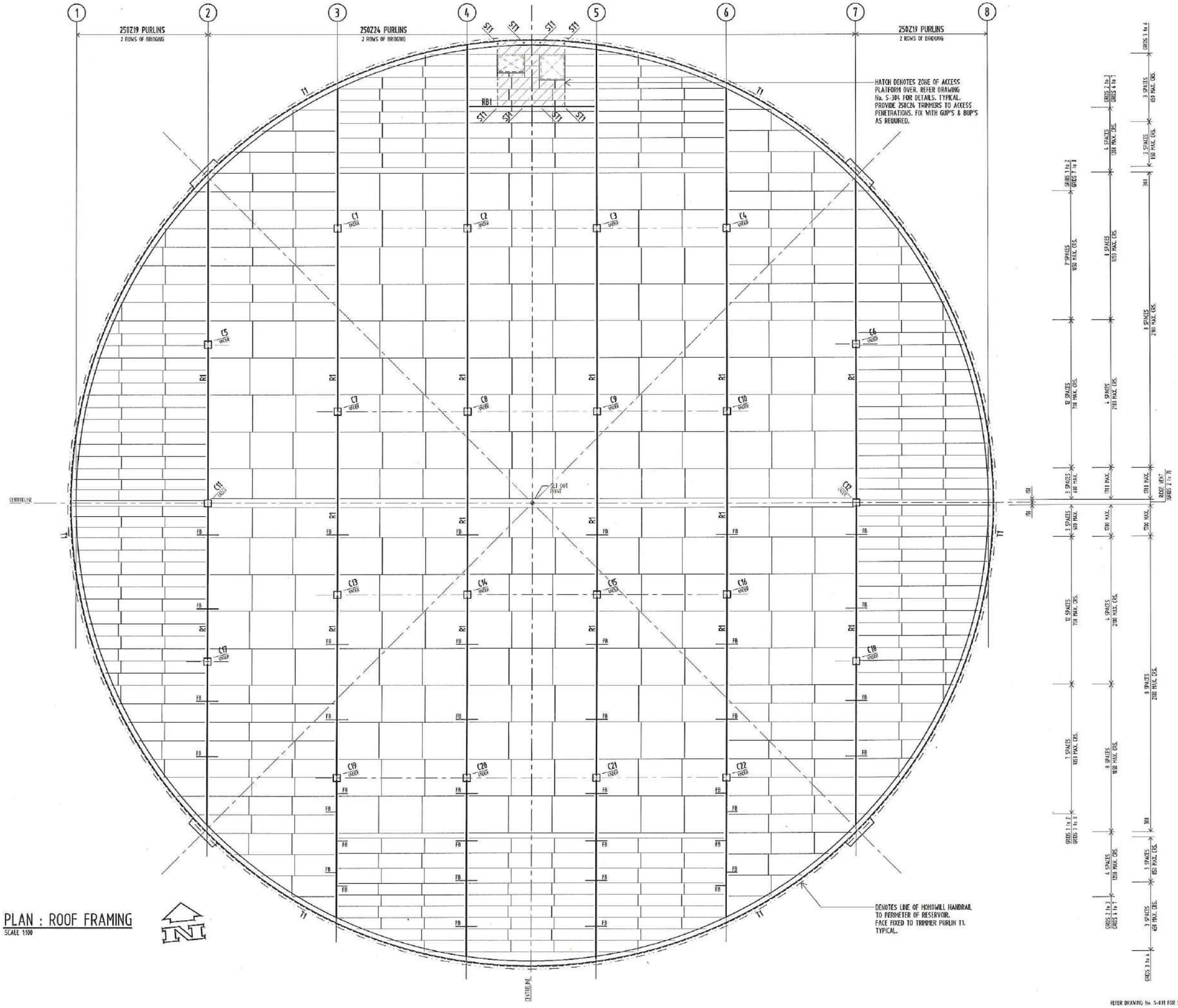

PLAN : ROOF FRAMING

SCALE 1:100

TABLE 1 : ROOF FRAMING MEMBER SCHEDULE

MEMBER	DESCRIPTION	REMARKS
RAFTERS R1	360UB51	
TRIMMING PURLIN T1	125x125x4.0 RHS	BEND LONG, ROLLED TO SUIT DIAMETER & SEAL PLATE EACH END EFW ALL ROUND
ROOF BEAM RB1	300x90 PFC	RB1 TO RAFTER CONNECTION : 2/M16-8.8/S BOLTS TO 12 STIFFENER PLATE, 6 EFW ALL ROUND TO RB, ADDITIONAL 12 STIFFENER OPPOSITE SIDE OF WEBS.
STUB COLUMN ST1	76x2.3 CHS	ST1 TO RAFTER/PLATFORM CONNECTION : 12 BASE/TOP PLATE, 6 EFW ALL ROUND 2/M16-8.8/S BOLTS TO STEELWORK, 2/M16 S.S CHEMSET ANCHORS TO WALL. 125mm EMBEDMENT.

COLORBOND DOUBLE SIDED 'ULTRA' ROOF SHEETING TO BE 0.48 BMT TRIMDEK HI-TEN CREST FIXED WITH CYCLONE WASHERS AND CLASS 4 SCREWS TO MANUFACTURERS RECOMMENDATIONS.

NOTES

1. ALL STEELWORK TO BE HOT DIP GALVANISED TO AS/NZS 4680 AFTER FABRICATION. MINIMUM COATING 600g/m² WITH D.F.T. 200 MICRONS.
2. ALL PURLINS TO AS 1397 WITH DOWNTURNED LIPS & SHALL HAVE ZAM COATING PROTECTION.
3. ALUMINIUM TO BE ISOLATED FROM STEEL AND BOLTS WITH NEOPRENE WASHERS AND SLEEVES.
4. ALL GALVANISED SURFACES THAT ARE DAMAGED DURING THE WORK SHALL BE WIRE BRUSHED OR BLAST CLEANED AND RECIEVE TWO COATS OF TWO-PACK EPOXY ZINC RICH PRIMER OF A TOTAL FILM THICKNESS OF 100um.
5. ALL NUTS, BOLTS AND WASHERS U.N.O. SHALL BE GALVANISED
6. HOLDING DOWN BOLTS SHALL BE STAINLESS STEEL AND BE SUPPLIED WITH STAINLESS STEEL LEVELLING NUTS, NUTS AND WASHERS.
7. RIDGE VENT TO BE PROVIDED BETWEEN GRIDS 2 to 7, SIZE TO SUIT 300mm MIN. THROAT

NOTE : IF SAFETY LINE FIXINGS ARE REQUIRED FOR SPECIALIST ACTIVITIES NOT SAFEGUARDED BY HANDRAILS &/OR HANDRAILS/GATES TO HATCHES. REFER DETAIL C, DRAWING No. S-303 FOR A SUITABLE DETAIL WITH CONNECTION TO ROOF RAFTER.

T1	ISSUED FOR TENDER	C.J.F.	17.02.17
	Amendment	By	Date

glynntucker consulting engineers
GLYNN TUCKER Pty Ltd
3/32 Balaclava Street
P.O. Box 8284, Woolloongabba 4102
t : 07 3839 1238
f : 07 3832 5573
e : brisbane@glynntucker.com.au
www.glynntucker.com.au
Also at Townsville
t : 07 4772 4222, f : 07 4721 1968

DOUGLAS SHIRE COUNCIL

Project
PORT DOUGLAS WATER STORAGE AND TRUNK WATER SUPPLY FOR DOUGLAS SHIRE COUNCIL

Sheet Title ROOF FRAMING PLAN

Drawn	C.R.P.	
Date	OCTOBER 2012	
Scale	1:100	A1 SHEET
Checked	R.A.J.	
Approved	E.V.A.	MIE Aust RPEQ 4953
Project No.	24021	Drg No. S-300 T1

REFER DRAWING No. S-001 FOR STRUCTURAL NOTES.

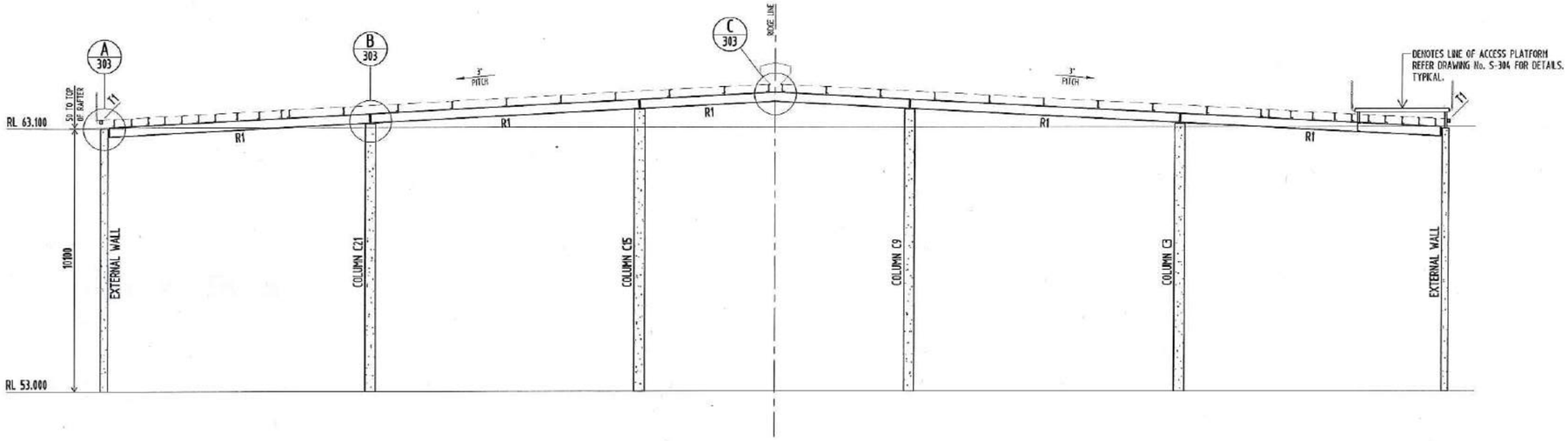

ELEVATION : GRID 5

SCALE 1:100

NOTE : GRID 4 SIMILAR

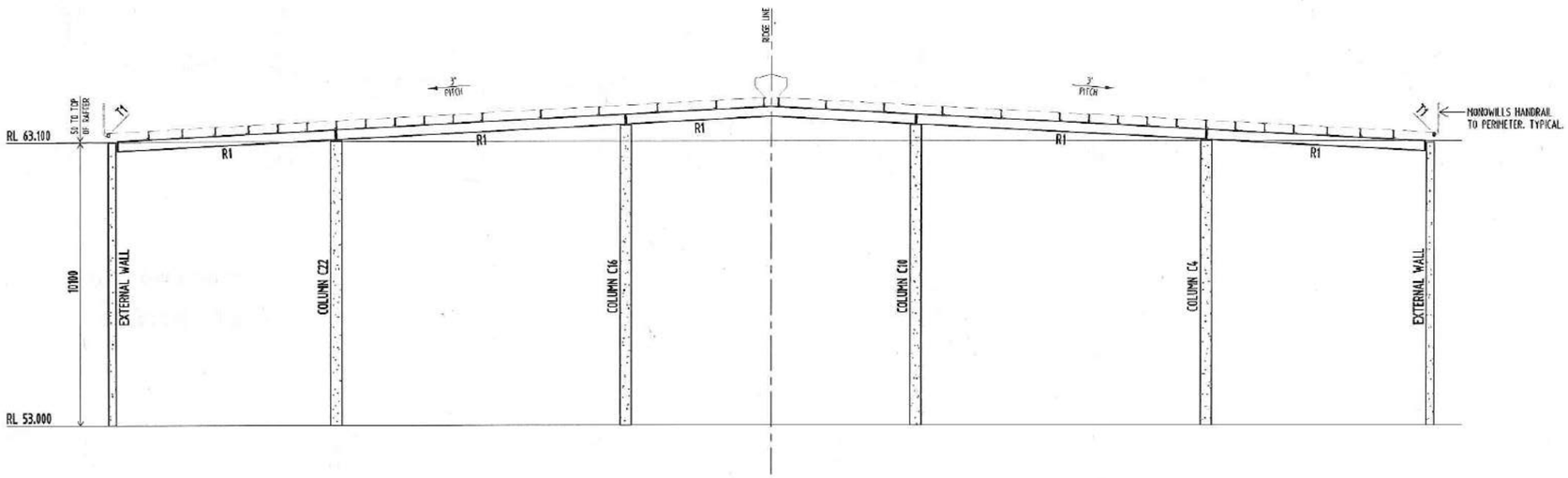

ELEVATION : GRID 6

SCALE 1:100

NOTE : GRID 3 SIMILAR

TABLE No. 1 : TOP OF COLUMN RL'S

COLUMN	TOP OF COLUMN RL	COLUMN	TOP OF COLUMN RL
C1, C4, C19, C22	63.920	C7, C10, C13, C16	63.665
C2, C3, C20, C21	63.240	C8, C9, C14, C15	63.785
C5, C6, C17, C18	63.180	C11, C12	63.650

T1	ISSUED FOR TENDER	C.J.F.	17.02.17
	Amendment	By	Date

glynntucker
consulting engineers

GLYNN TUCKER Pty Ltd
3/32 Balaclava Street
P.O. Box 8284, Woolloongabba 4102
t : 07 3839 1238
f : 07 3832 5573
e : brisbane@glynntucker.com.au
www.glynntucker.com.au
Also at Townsville
t : 07 4772 4722, f : 07 4721 1968

DOUGLAS
SHIRE COUNCIL

Project

PORT DOUGLAS WATER STORAGE
AND TRUNK WATER SUPPLY
FOR
DOUGLAS SHIRE COUNCIL

Sheet Title FRAMING ELEVATIONS :
SHEET 1 OF 2

Drawn	C.R.P.	
Date	OCTOBER 2012	
Scale	1:100	A1 SHEET
Checked	RAGA	
Approved	C.J.F.	MIE Aust RPEQ 4953
Project No. 24021	Drg No. S-301	T1

REFER DRAWING No. S-001 FOR STRUCTURAL NOTES.

TABLE No. 1 : TOP OF COLUMN RL'S

COLUMN	TOP OF COLUMN RL	COLUMN	TOP OF COLUMN RL
C1, C4, C19, C22	63.320	C7, C10, C13, C16	63.665
C2, C3, C20, C21	63.240	C8, C9, C14, C15	63.785
C5, C6, C17, C18	63.180	C11, C12	63.650

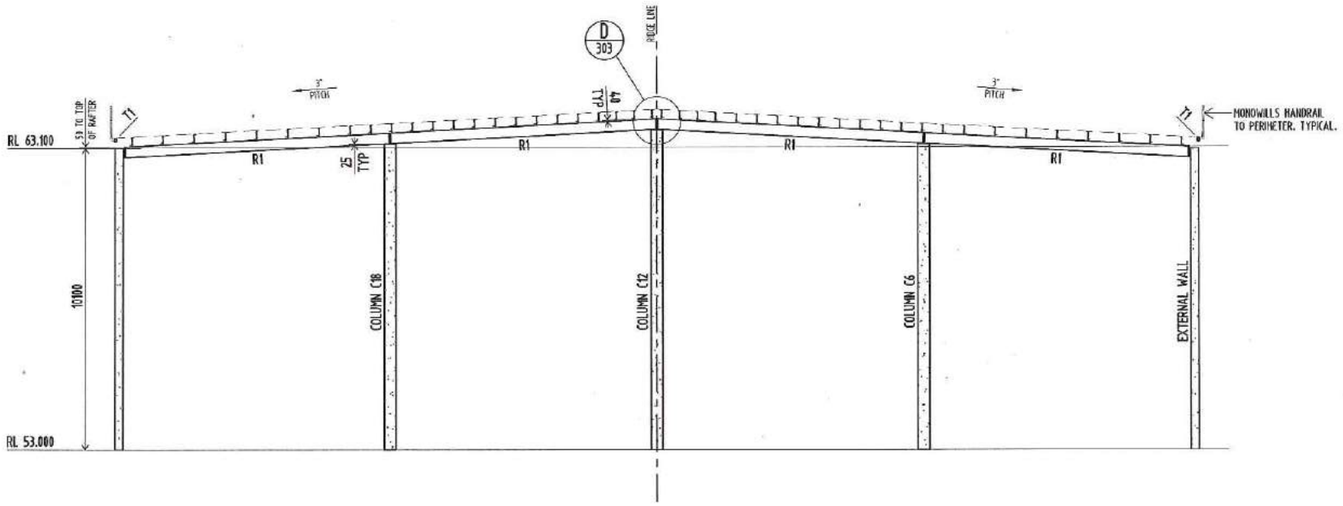

ELEVATION : GRID 7

SCALE 1:100

NOTE : GRID 2 SIMILAR

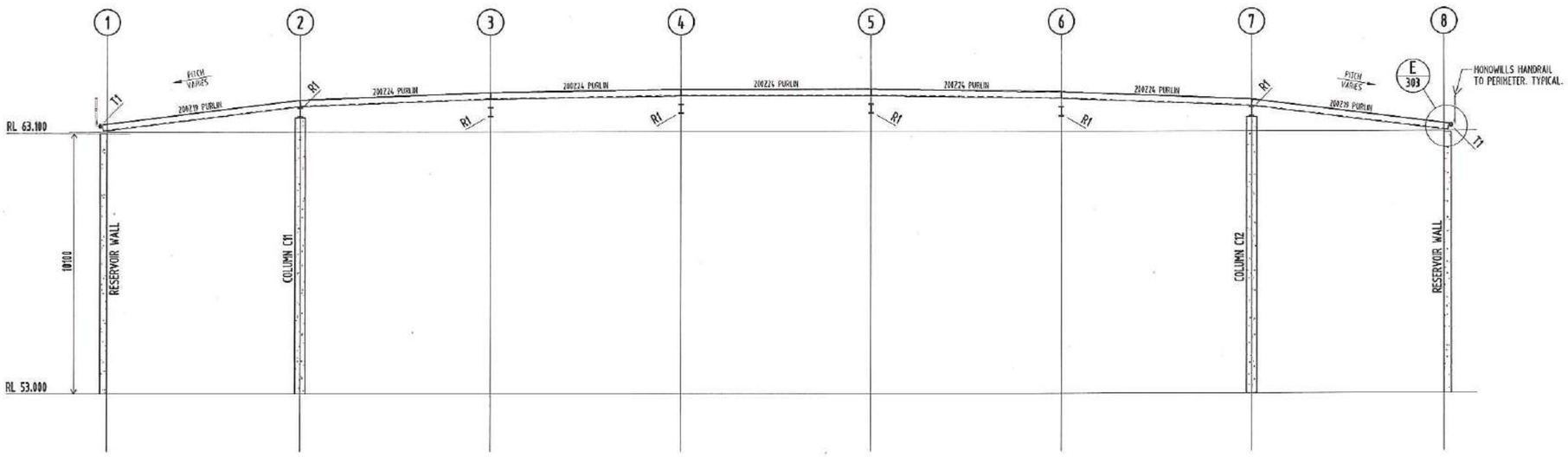

ELEVATION : RIDGE LINE

SCALE 1:100

T1	ISSUED FOR TENDER	C.J.F.	17.02.17
	Amendment	By	Date

glynntucker consulting engineers

GLYNN TUCKER Pty Ltd
3/32 Balaclava Street
P.O. Box 8284, Woolloongabba 4102
t : 07 3839 1238
f : 07 3832 5573
e : brisbane@glynntucker.com.au
www.glynntucker.com.au
Also at Townsville
t : 07 4772 4722, f : 07 4721 1968

DOUGLAS SHIRE COUNCIL

Project

PORT DOUGLAS WATER STORAGE
AND TRUNK WATER SUPPLY
FOR
DOUGLAS SHIRE COUNCIL

Sheet Title FRAMING ELEVATIONS :
SHEET 2 OF 2

Drawn	C.R.P.	
Date	OCTOBER 2012	
Scale	1:100	A1 SHEET
Checked	R.A.G.	
Approved	E.L. Morris	MIE Aust RPEQ 4953
Project No. 24021	Drg No. S-302 T1	

REFER DRAWING No. S-401 FOR STRUCTURAL NOTES.

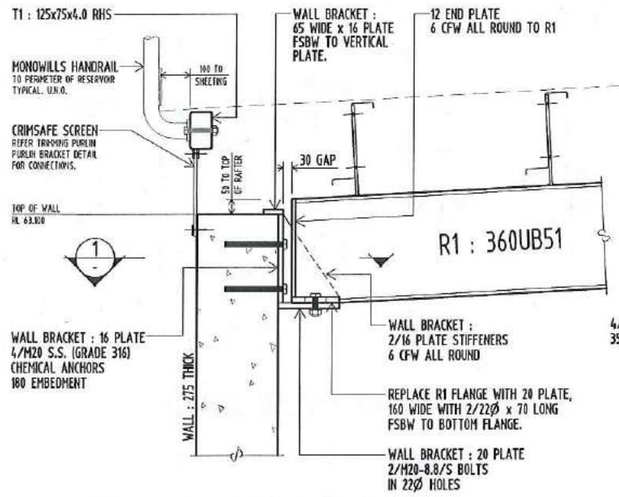

DETAIL A (S-301)
SCALE 1:10

TYPICAL RAFTER TO WALL CONNECTION

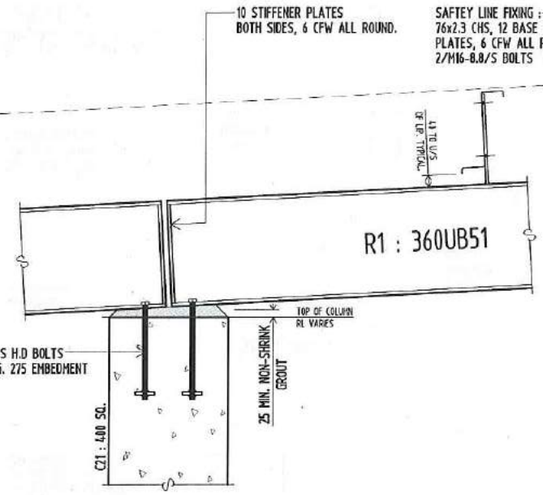

DETAIL B (S-301)
SCALE 1:10

TYPICAL RAFTER TO COLUMN CONNECTION

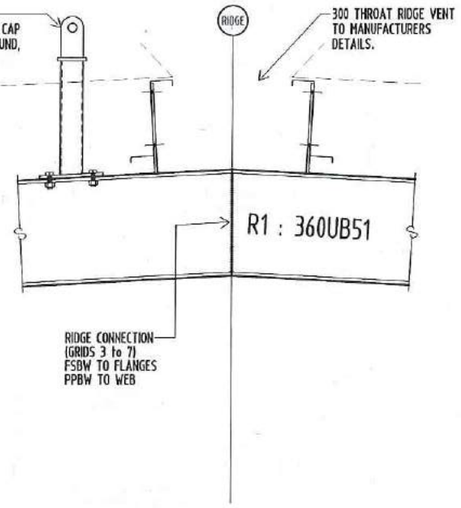

DETAIL C (S-301)
SCALE 1:10

RIDGE CONNECTION GRIDS 3 to 6

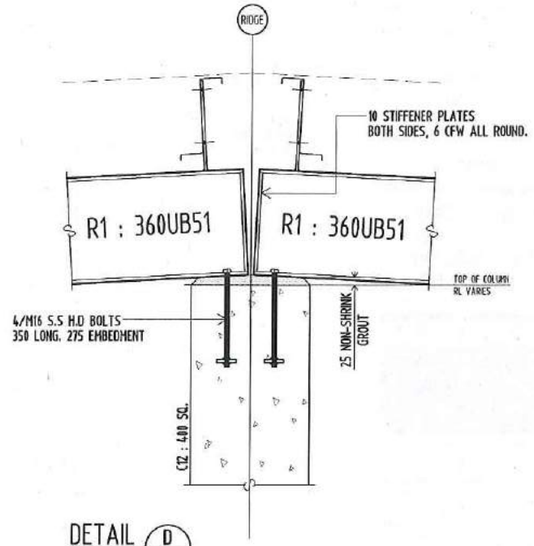

DETAIL D (S-302)
SCALE 1:10

RIDGE CONNECTION GRIDS 2 & 7

NOTE : ISOLATE STAINLESS STEEL FROM GALVANISED SURFACES WITH PABKOTE EMULSION TYPE 3 IN ACCORDANCE WITH THE MANUFACTURERS RECOMMENDATIONS AND ISOLATE GALVANISED BOLTS FROM STAINLESS STEEL PLATES WITH SUITABLE NEOPRENE SLEEVES & WASHERS.

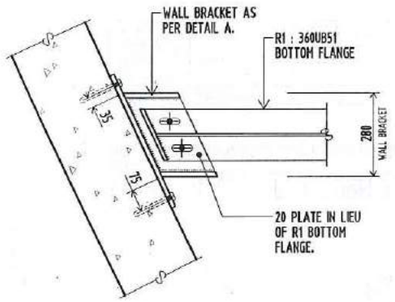

SECTION 1
SCALE 1:10

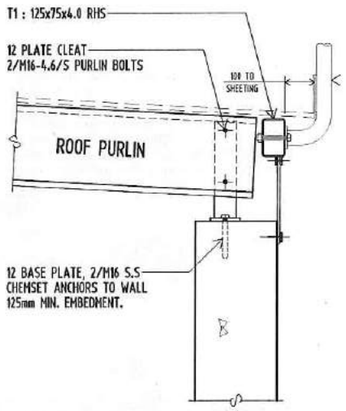

DETAIL E (S-302)
SCALE 1:10

TYPICAL PURLIN TO WALL CONNECTION

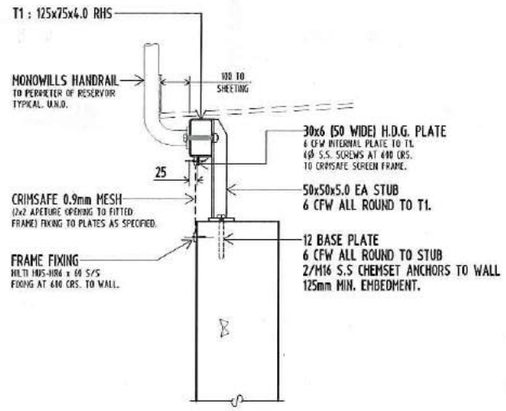

TRIMMING PURLIN T1 CONNECTION STUB
SCALE 1:10

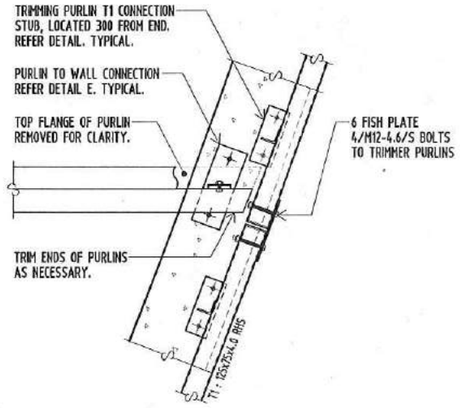

PLAN : PURLIN TO WALL CONNECTION
SCALE 1:10

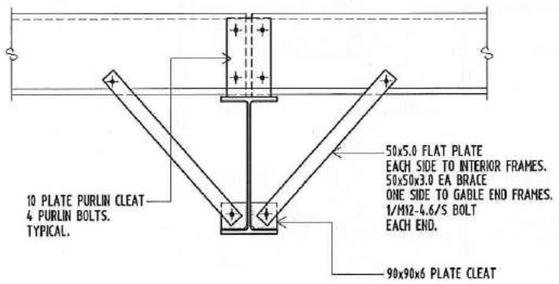

TYPICAL RAFTER FLYBRACE DETAIL
SCALE 1:10

T1	ISSUED FOR TENDER	C.J.F.	17.02.17
	Amendment	By	Date

glynntucker consulting engineers
GLYNN TUCKER Pty Ltd
3/32 Balaclava Street
P.O. Box 8284, Woolloongabba 4102
t : 07 3839 1238
f : 07 3832 5573
e : brisbane@glynntucker.com.au
www.glynntucker.com.au
Also at Townsville
t : 07 4772 4722, f : 07 4721 1068

DOUGLAS SHIRE COUNCIL

Project
PORT DOUGLAS WATER STORAGE
AND TRUNK WATER SUPPLY
FOR
DOUGLAS SHIRE COUNCIL

Sheet Title STEEL DETAILS SHEET

Drawn	C.R.P.	
Date	OCTOBER 2012	
Scale	1:100	A1 SHEET
Checked		
Approved		
Project No. 24021	Drg No. S-303 T1	

REFER DRAWING No. S-401 FOR STRUCTURAL NOTES.

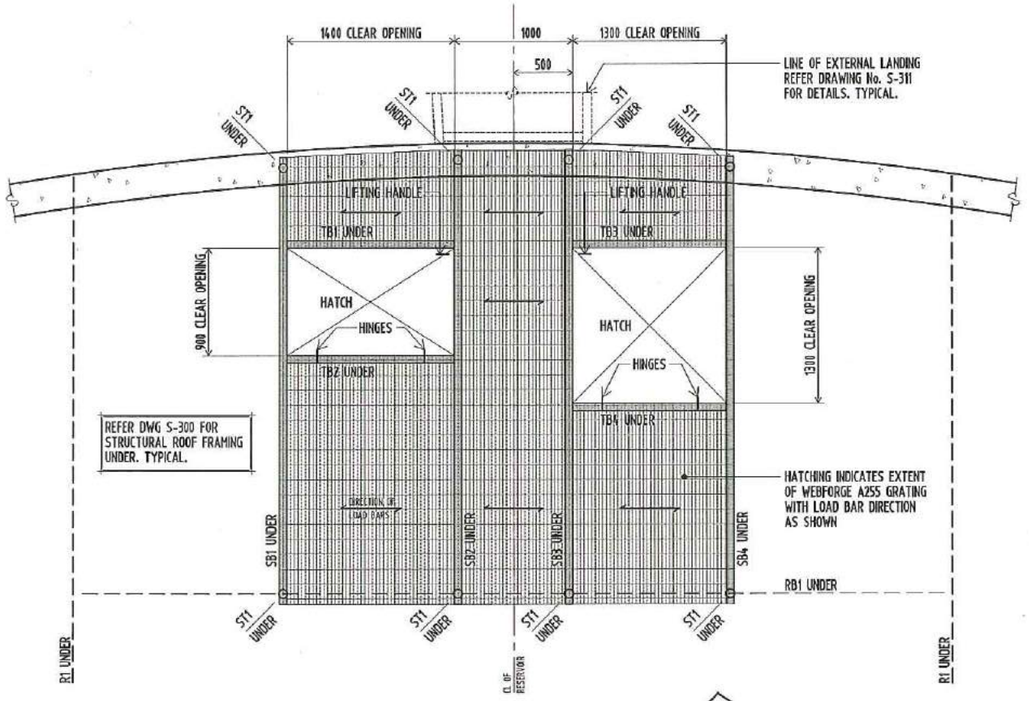

PLAN - ACCESS PLATFORM & HATCHES IN ROOF

SCALE 1:25

NOTE : HANDRAILS REMOVED FOR CLARITY, REFER DRAWING No. S-310 FOR EXTENT. TYPICAL.

TABLE 1 :

MEMBER	DESCRIPTION	REMARKS
SUPPORT BEAM SB1-SB4	125TFC	
TRIMMER BEAM TB1-TB4	125TFC	SUPPORT BEAM TO TRIMMER BEAM CONNECTION 12 END PLATE TO BOTTOM, 4GPM ALL ROUND 2/M16 8.8/S BOLTS TO SB1

NOTES

1. ALUMINIUM ANGLES SHALL BE 6061-T6 ALLOY.
2. ALUMINIUM TREAD PLATE SHALL BE FABRICATED FROM 5251 ALLOY.
3. ALUMINIUM WELDING SHALL BE IN ACCORDANCE WITH AS1665 CATEGORY 'B' USING MIG/TIG PROCESS.
4. WELDS SHALL BE 6mm CONTINUOUS FILLET UNO.
5. ISOLATE ALUMINIUM FROM STAINLESS STEEL WITH SUITABLE NEOPRENE WASHERS & SLEEVES.
6. STAINLESS STEEL SHALL BE GRADE 316L.

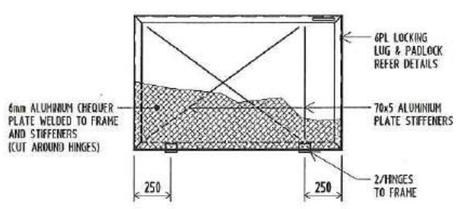

900x1400 HATCH COVER

SCALE 1:20

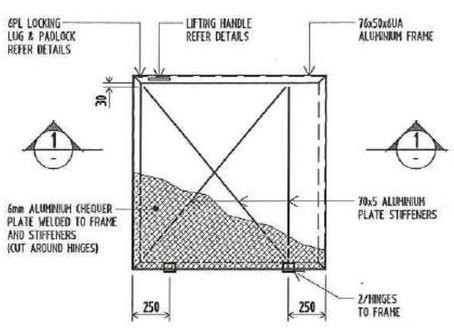

1300x1300 HATCH COVER

SCALE 1:20

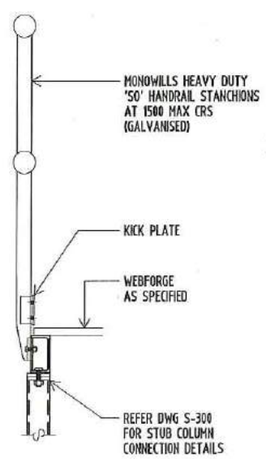

TYPICAL FIXING OF HANDRAIL TO FRAMING SUPPORTS

SCALE 1:10

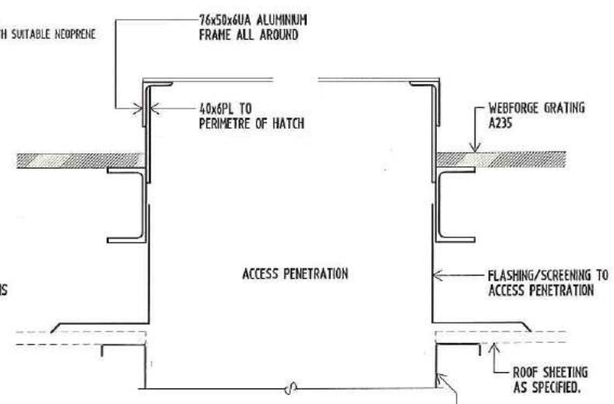

SECTION 1

SCALE 1:5

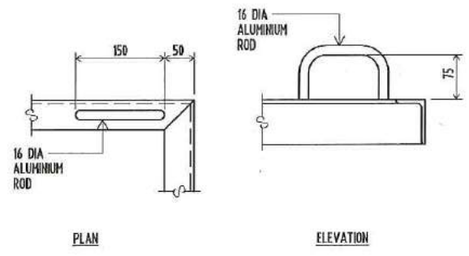

LIFTING HANDLE

SCALE 1:5

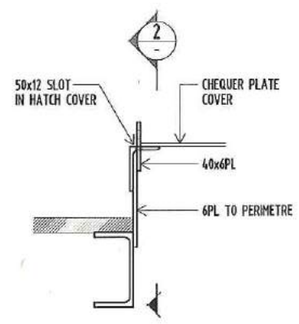

LOCKING LUG

SCALE 1:5

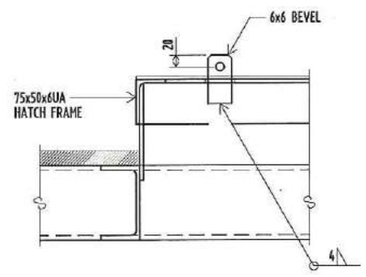

SECTION 2

SCALE 1:5

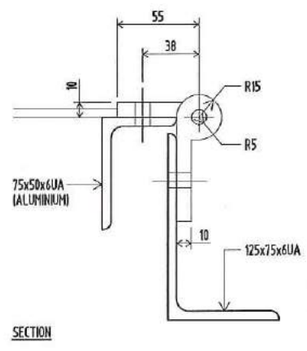

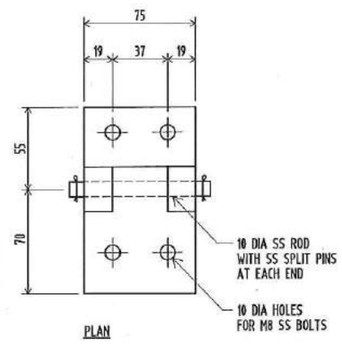

HINGE DETAILS

SCALE 1:2

REFER DRAWING No. S-001 FOR STRUCTURAL NOTES.

T1	ISSUED FOR TENDER	C.J.F.	17.02.17
	Amendment	By	Date

glynntucker consulting engineers
GLYNN TUCKER Pty Ltd
3/32 Balaclava Street
P.O. Box 8284, Woolloongabba 4102
t : 07 3839 1238
f : 07 3832 5573
e : brisbane@glynntucker.com.au
www.glynntucker.com.au
Also at Townsville
t: 07 4772 4722, f: 07 4721 1968

DOUGLAS SHIRE COUNCIL

Project
PORT DOUGLAS WATER STORAGE AND TRUNK WATER SUPPLY FOR DOUGLAS SHIRE COUNCIL

Sheet Title PLATFORM PLAN & DETAILS

Drawn	G.K.
Date	MARCH 2013
Scale	1:25, 1:20, 1:10, 1:5 & 1:2 — A1 SHEET
Checked	RAGdl
Approved	C.J.F. — MIE Aust RPEQ 4153
Project No.	24021
Drg No.	S-304 T1

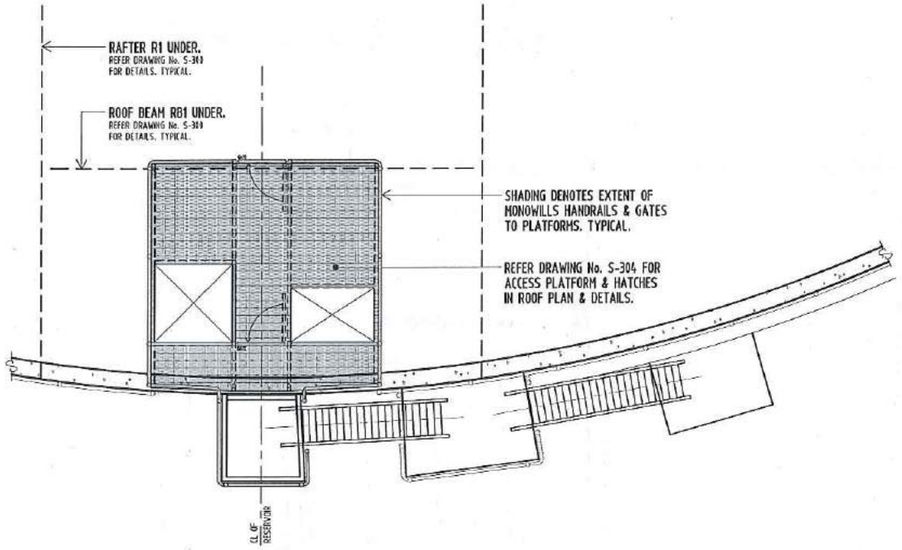

PLAN: EXTERNAL LADDERS & LANDINGS
SCALE 1:50

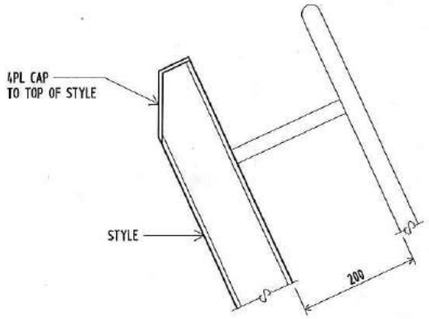

DETAIL AT TOP OF LADDER STYLE
SCALE 1:5

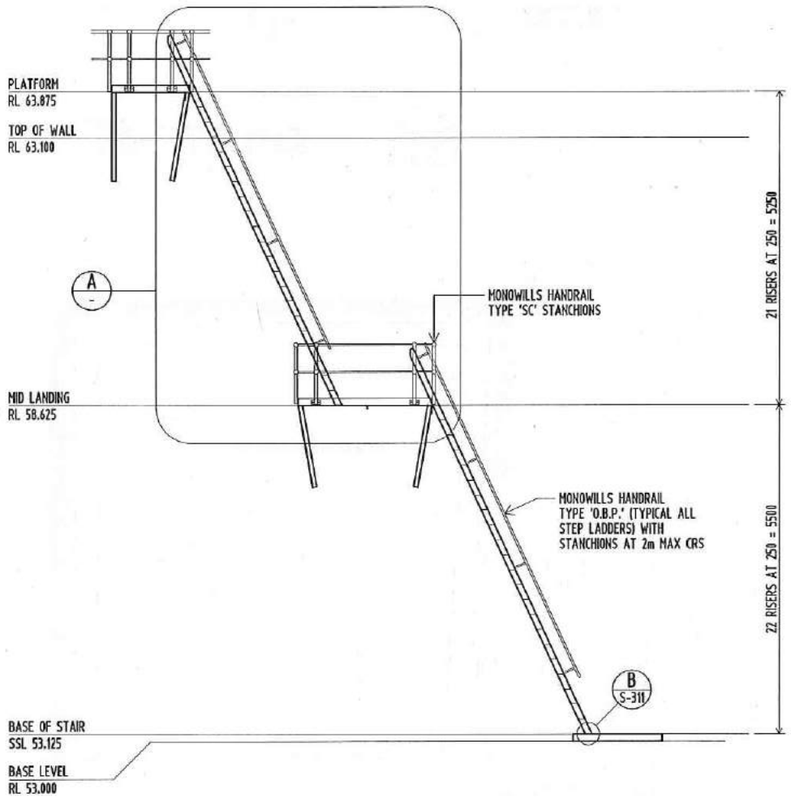

DEVELOPED ELEVATION ON EXTERNAL LADDERS
SCALE 1:50

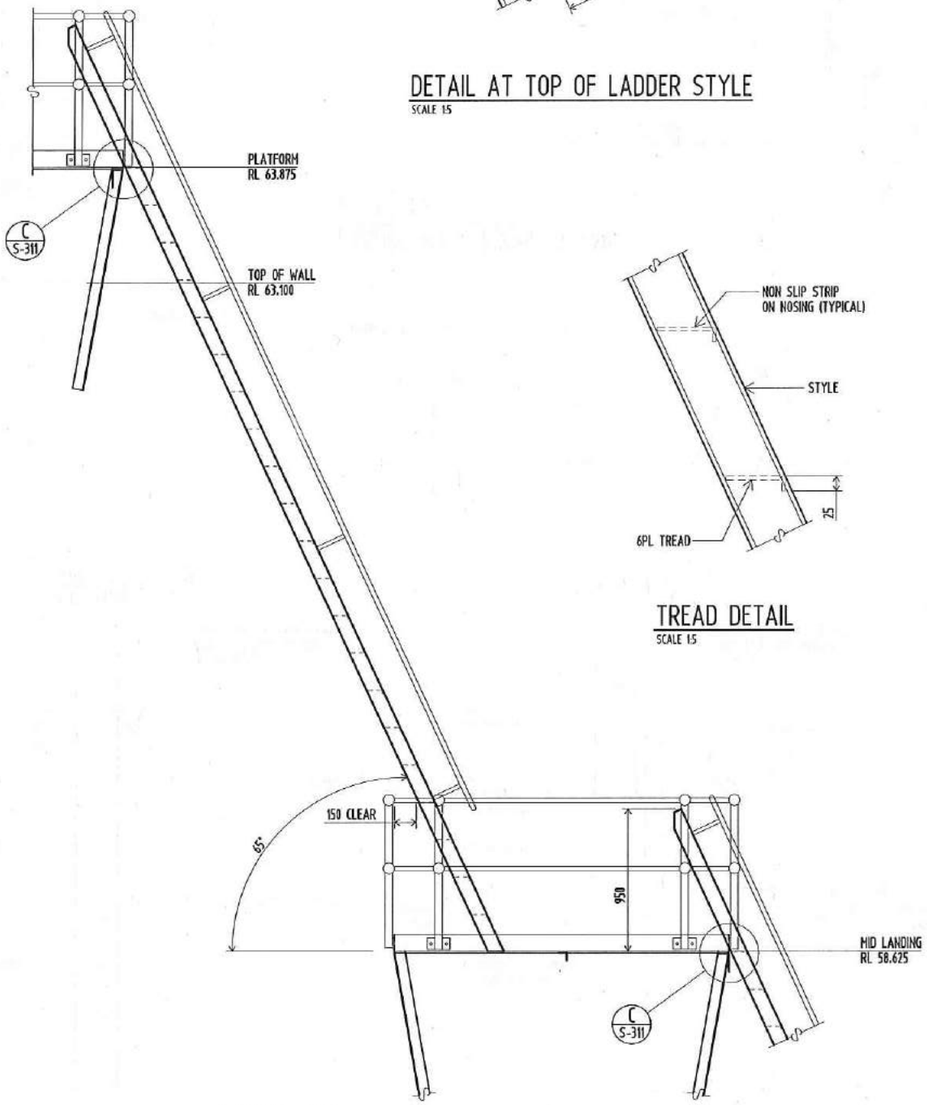

DETAIL A
SCALE 1:20

TREAD DETAIL
SCALE 1:5

TABLE 1: EXTERNAL STAIRS MATERIAL LIST

STILES	100TFC
TREADS	6mm FLOOR PLATE

REFER DRAWING No. S-001 FOR STRUCTURAL NOTES.

T1	ISSUED FOR TENDER	C.J.F.	17.02.17
	Amendment	By	Date

glynntucker consulting engineers
GLYNN TUCKER Pty Ltd
3/32 Balaclava Street
P.O. Box 8284, Woolloongabba 4102
t : 07 3839 1238
f : 07 3832 5573
e : brisbane@glynntucker.com.au
www.glynntucker.com.au
Also at Townsville
t : 07 4772 4722, f : 07 4721 1968

DOUGLAS SHIRE COUNCIL

Project
PORT DOUGLAS WATER STORAGE
AND TRUNK WATER SUPPLY
FOR
DOUGLAS SHIRE COUNCIL

Sheet Title EXTERNAL LADDER DETAILS: SHEET 1

Drawn	G.K.	
Date	MARCH 2013	
Scale	1:50, 1:20, 1:10 & 1:5	A1 SHEET
Checked	R.A.Gill	
Approved	E.J. Morrow	MIE Aust RPEQ 4953
Project No. 24021	Drg No. S-310	T1

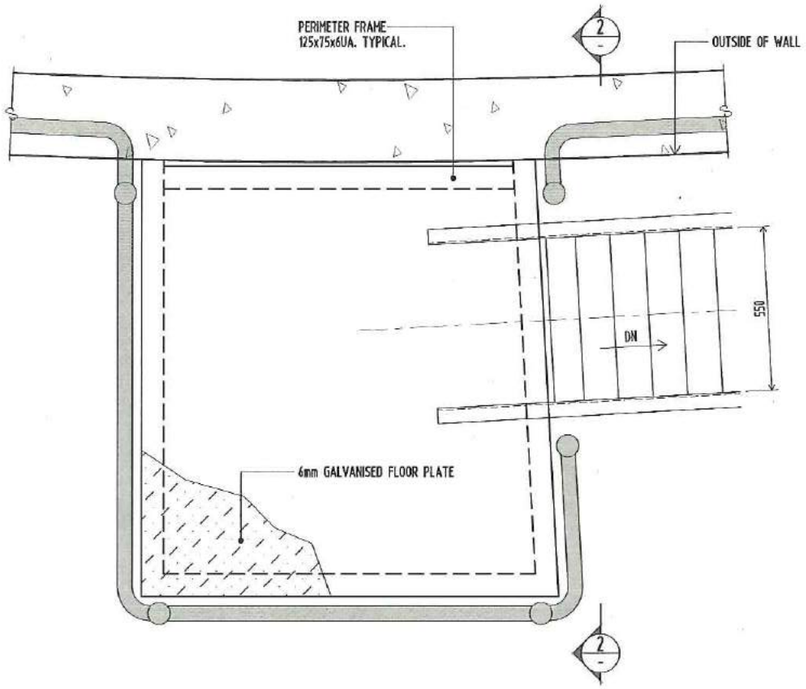

LANDING AT RL 63.875
SCALE 1:10

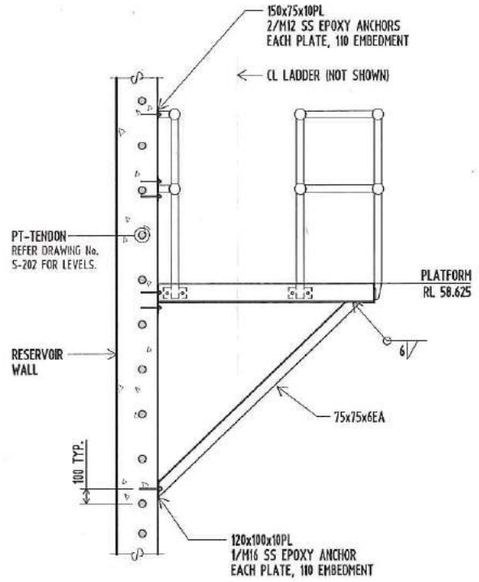

SECTION 1
SCALE 1:20

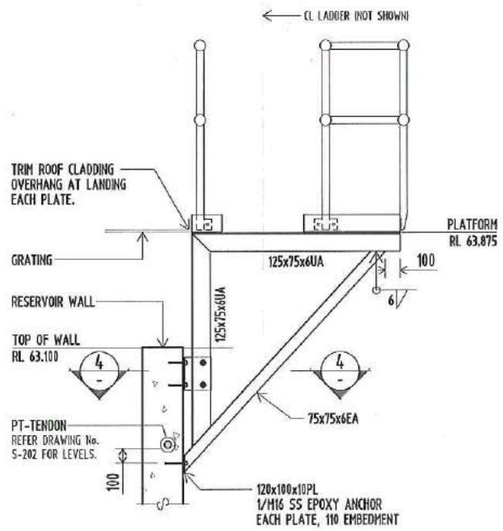

SECTION 2
SCALE 1:20

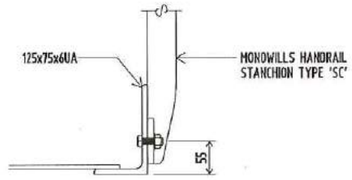

STANCHION FIXING DETAIL FOR PLATFORMS
SCALE 1:5

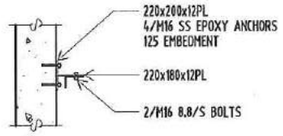

SECTION 4
SCALE 1:20

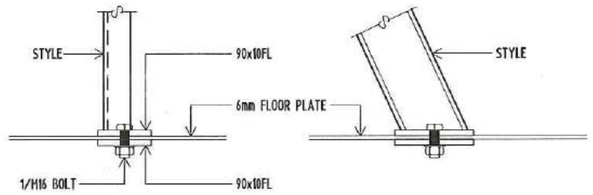

LADDER BASE FIXING DETAIL AT STYLES
SCALE 1:5

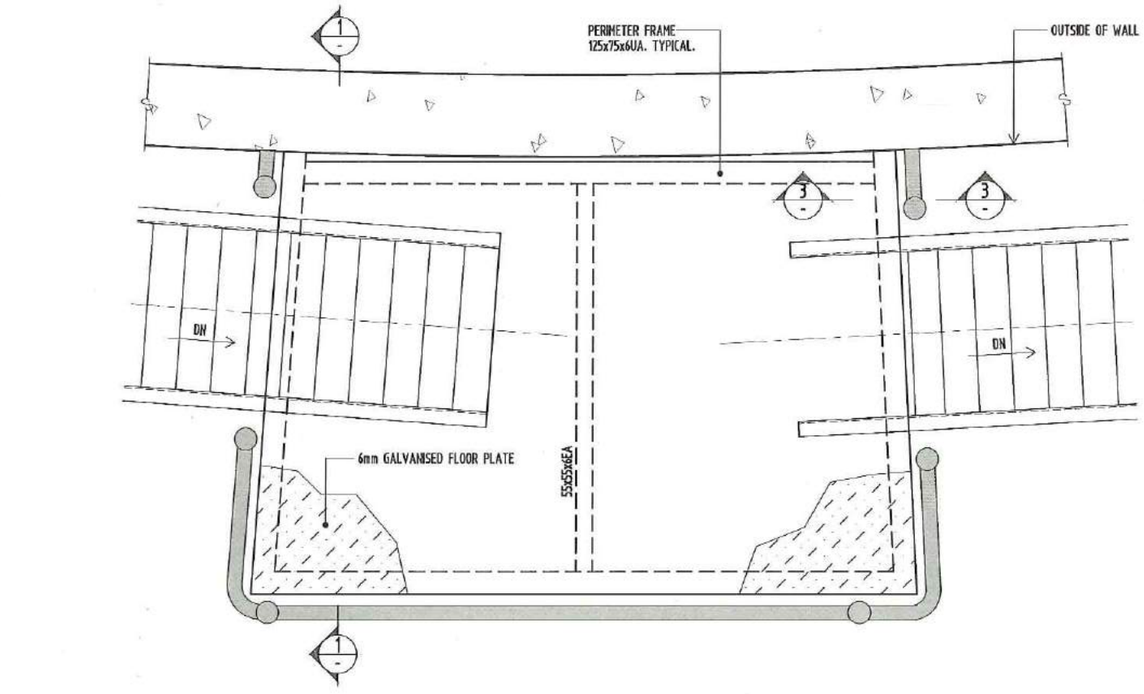

LANDING AT RL 58.625
SCALE 1:10

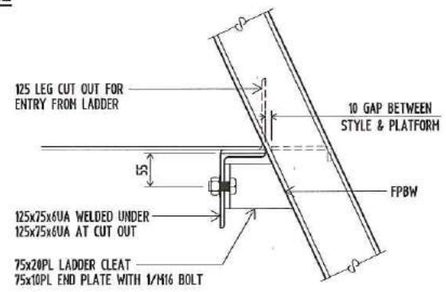

DETAIL C
SCALE 1:5 S-310

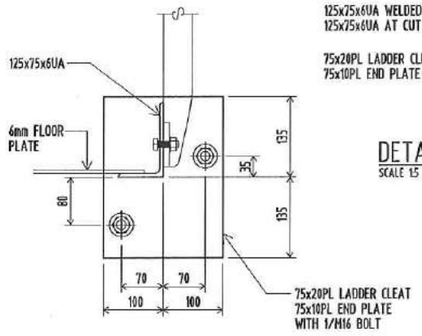

SECTION 3
SCALE 1:5

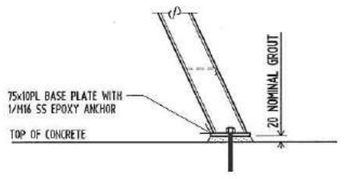

DETAIL B
SCALE 1:10 S-310

REFER DRAWING No. S-001 FOR STRUCTURAL NOTES.

	Amendment	By	Date
T1	ISSUED FOR TENDER	C.J.F.	17.02.17

glynntucker consulting engineers
GLYNN TUCKER Pty Ltd
3/32 Balaclava Street
P.O. Box 6284, Woolloongabba 4102
t : 07 3839 1238
f : 07 3832 5573
e : brisbane@glynntucker.com.au
www.glynntucker.com.au
Also at Townsville
t : 07 4772 4722, f : 07 4721 1968

DOUGLAS SHIRE COUNCIL

Project
PORT DOUGLAS WATER STORAGE
AND TRUNK WATER SUPPLY
FOR
DOUGLAS SHIRE COUNCIL

Sheet Title EXTERNAL LADDER DETAILS: SHEET 2

Drawn	G.K.
Date	MARCH 2013
Scale	1:50, 1:20, 1:10 & 1:5 — A1 SHEET
Checked	R.A.G.
Approved	E.J. Murray — MIE Aust. RPEQ 4953
Project No.	24021
Drg No.	S-311 T1

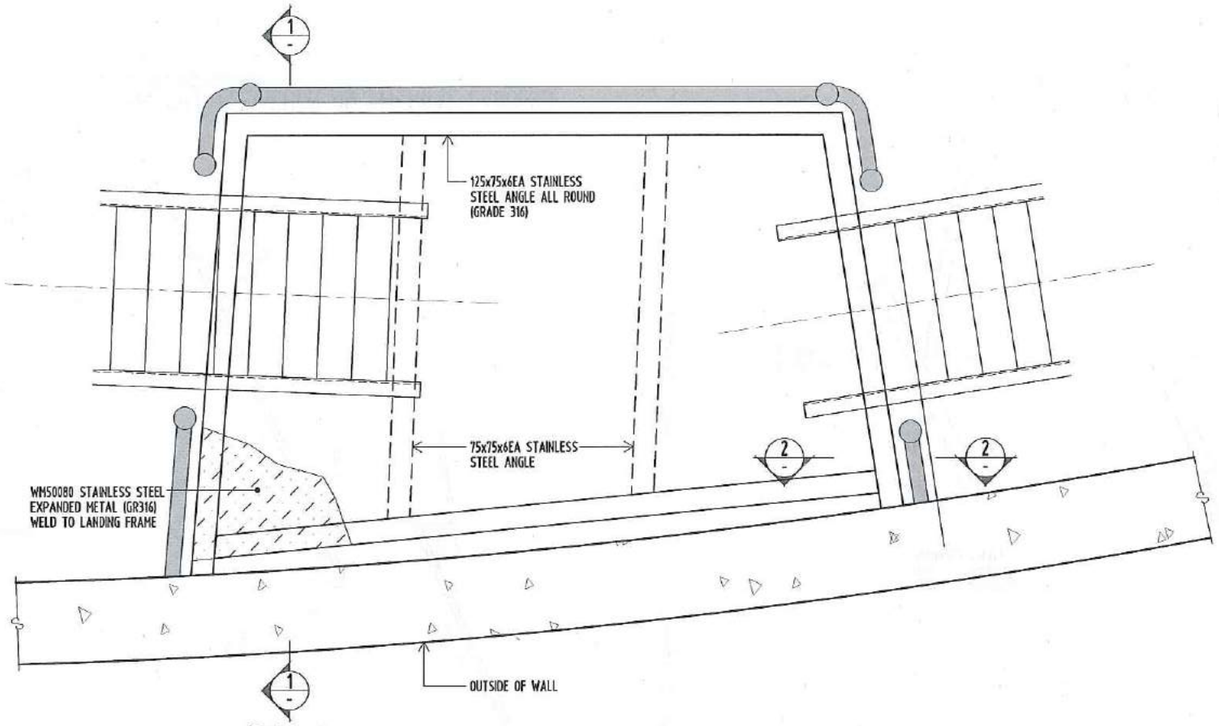

LANDING AT RL 58.625

SCALE 1:50

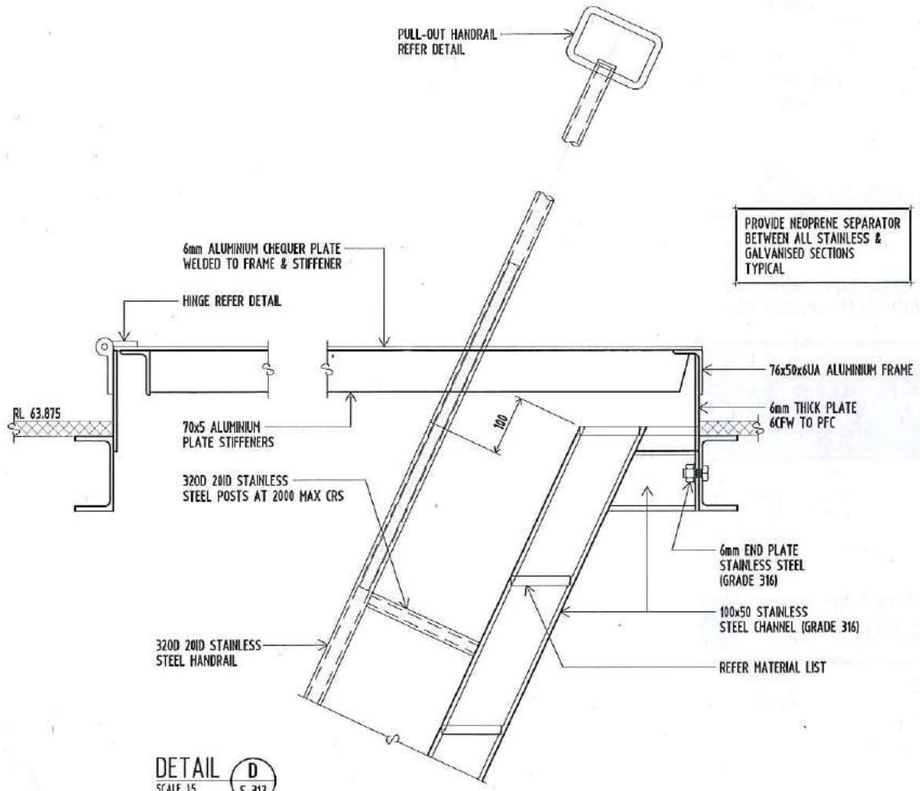

DETAIL D S-312

SCALE 1:5

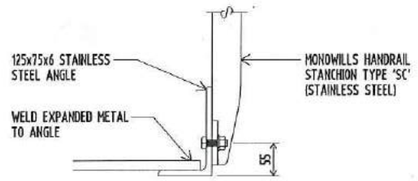

STANCHION FIXING DETAIL FOR PLATFORMS

SCALE 1:5

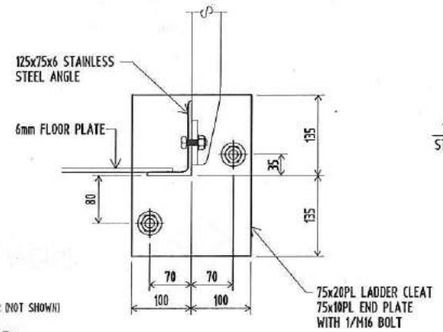

SECTION 2

SCALE 1:5

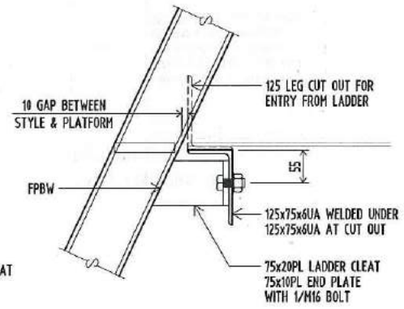

DETAIL C S-313

SCALE 1:5

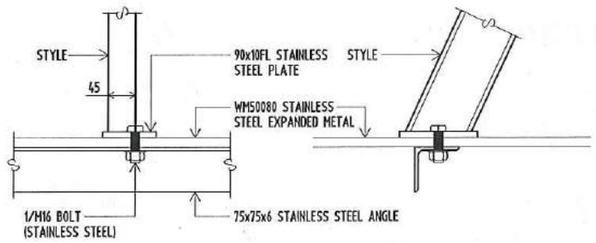

LADDER BASE FIXING DETAIL AT STYLES

SCALE 1:5

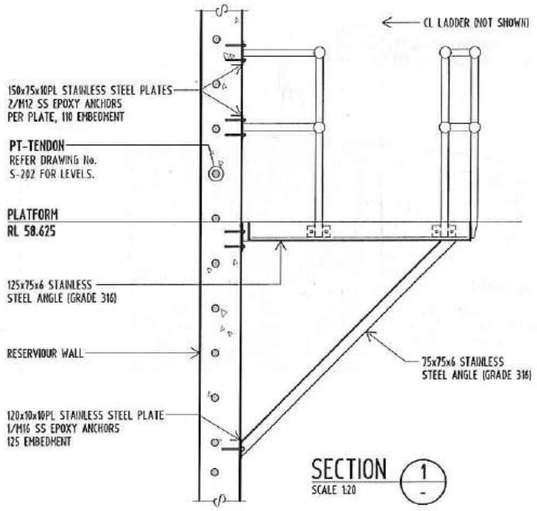

SECTION 1

SCALE 1:20

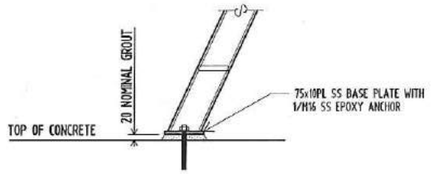

DETAIL B S-312

SCALE 1:10

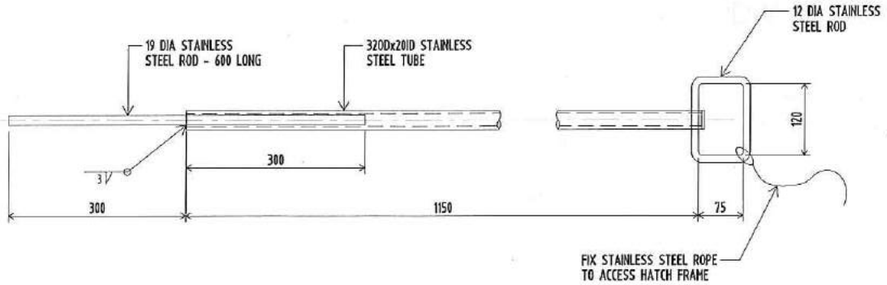

DETAIL OF PULL-OUT HANDRAIL - 2 REQUIRED

SCALE 1:5

REFER DRAWING No. S-100 FOR STRUCTURAL NOTES.

T1	ISSUED FOR TENDER	C.J.F.	17.02.17
	Amendment	By	Date

glynntucker consulting engineers

GLYNN TUCKER Pty Ltd
3/32 Balaclava Street
P.O. Box 8284, Woolloongabba 4102
t : 07 3839 1238
f : 07 3832 5573
e : brisbane@glynntucker.com.au
www.glynntucker.com.au
Also at Townsville
t : 07 4772 4722, f : 07 4721 1968

DOUGLAS SHIRE COUNCIL

Project
PORT DOUGLAS WATER STORAGE AND TRUNK WATER SUPPLY FOR DOUGLAS SHIRE COUNCIL

Sheet Title INTERNAL LADDER DETAILS: SHEET 2

Drawn	G.K.	
Date	MARCH 2013	
Scale	1:50, 1:20, 1:10 & 1:5	A1 SHEET
Checked	R.G.A.	
Approved	E.J.C. Murray	MIE Aust RPEQ 4953
Project No. 24021	Drg No. S-313 T1	

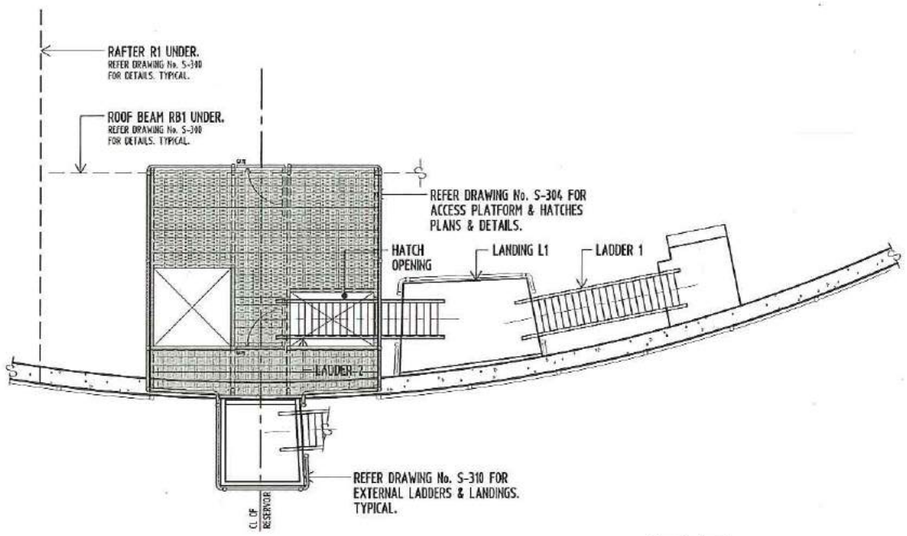

PLAN: INTERNAL LADDERS & LANDINGS

SCALE 1:50

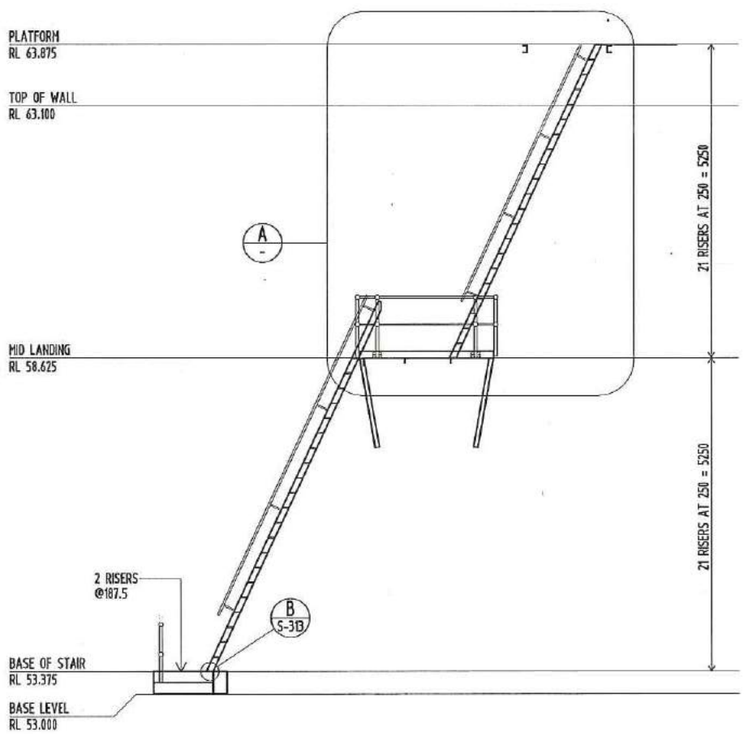

DEVELOPED ELEVATION ON INTERNAL LADDERS

LOOKING FROM INSIDE REVERVOUR

SCALE 1:50

TABLE 1: INTERNAL STAIRS MATERIAL LIST

STILES	100x50 STAINLESS STEEL CHANNEL (GRADE 316)
TREADS	WM54080 STAINLESS STEEL EXPANDED METAL (GR316) TREADS BANDED WITH 25x5 STAINLESS STEEL (GR316) FLAT BAR COMPLETE WITH YELLOW ABRASIVE NON-SLIP NOSING. TREAD SIZE 140x550

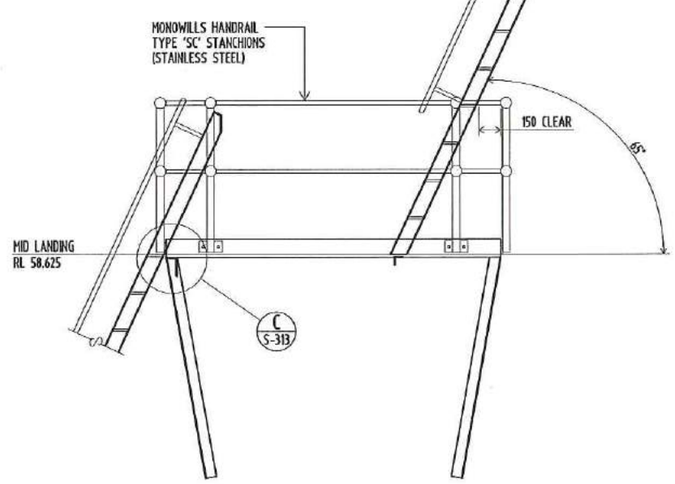

DETAIL A

SCALE 1:20

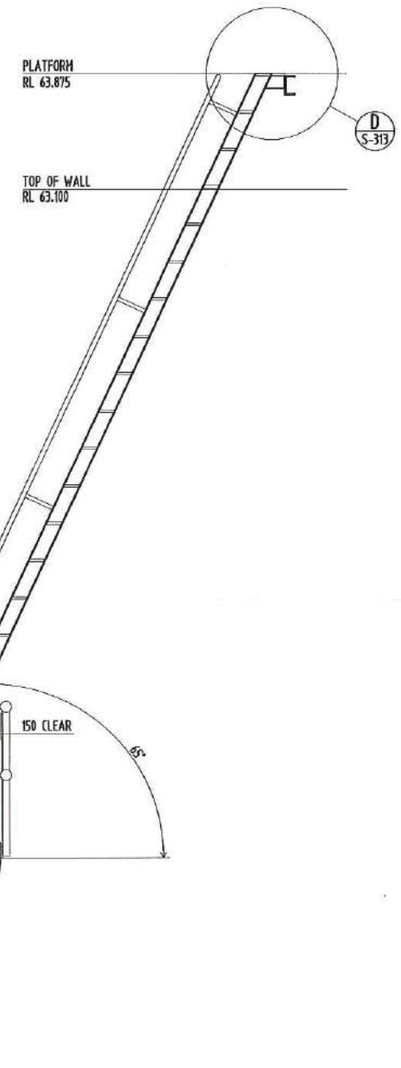

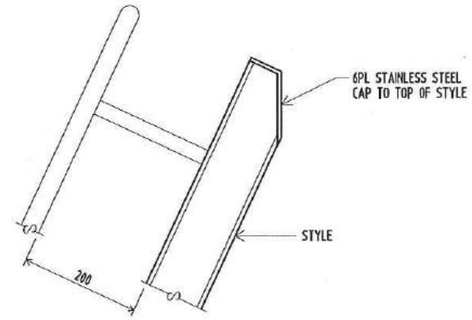

DETAIL AT TOP OF LADDER 1

SCALE 1:5

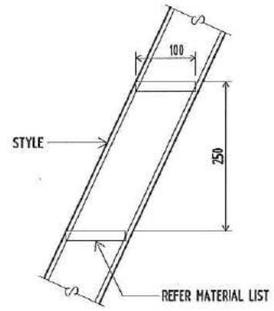

TREAD DETAIL

SCALE 1:5

T1	ISSUED FOR TENDER	C.J.F.	17.02.17
	Amendment	By	Date

glynntucker consulting engineers
GLYNN TUCKER Pty Ltd
3/32 Balaclava Street
P.O. Box 8284, Woolloongabba 4102
t : 07 3839 1238
f : 07 3832 5573
e : brisbane@glynntucker.com.au
www.glynntucker.com.au
Also at Townsville
t : 07 4772 4722, f : 07 4721 1968

DOUGLAS SHIRE COUNCIL

Project
PORT DOUGLAS WATER STORAGE AND TRUNK WATER SUPPLY FOR DOUGLAS SHIRE COUNCIL

Sheet Title INTERNAL LADDER DETAILS: SHEET 1

Drawn	G.K.	
Date	MARCH 2013	
Scale	1:50, 1:20, 1:10 & 1:5	A1 SHEET
Checked	R.A.G.	
Approved	C.J.F.	MIE Aust RPEQ 4953
Project No. 24021	Drg No. S-312	T1

REFER DRAWING No. S-001 FOR STRUCTURAL NOTES.

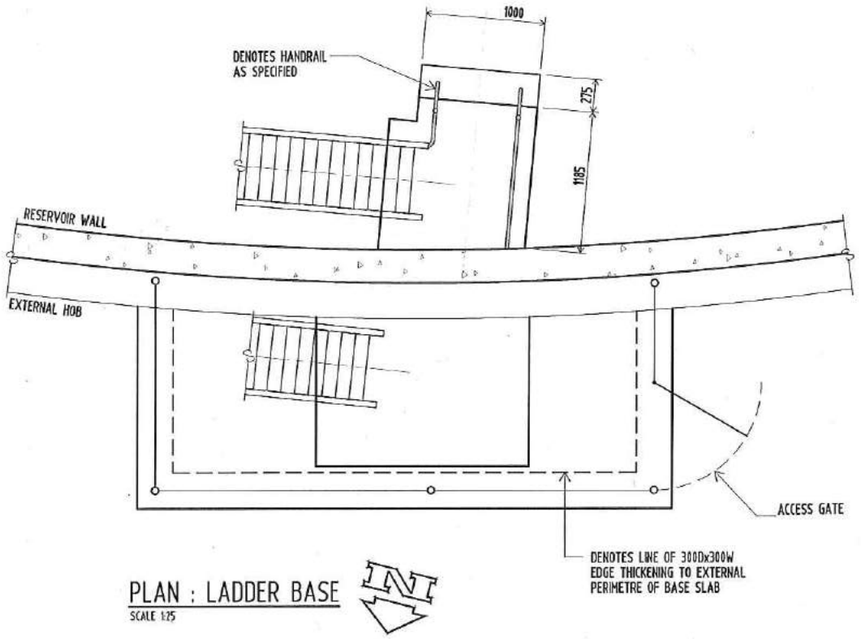

PLAN : LADDER BASE

SCALE 1:25

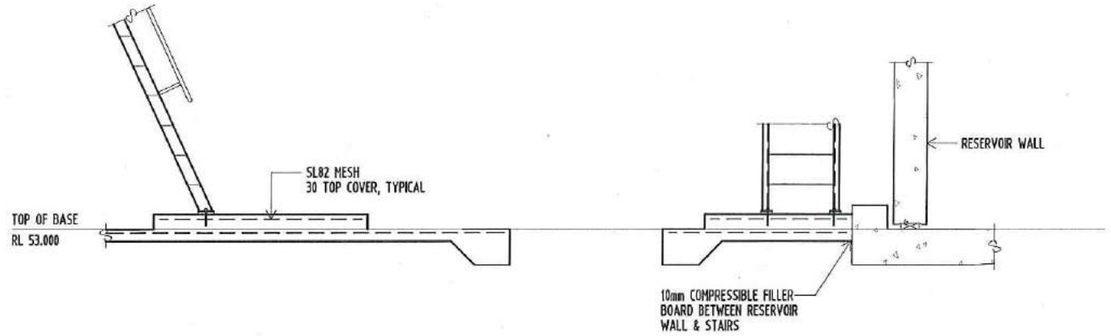

CONCRETE STAIR AT BASE OF EXTERNAL LADDER

SCALE 1:25

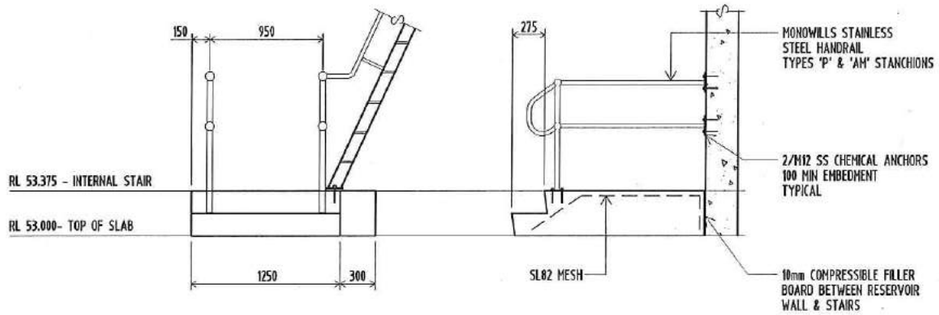

CONCRETE STAIR AT BASE OF INTERNAL LADDER

SCALE 1:25

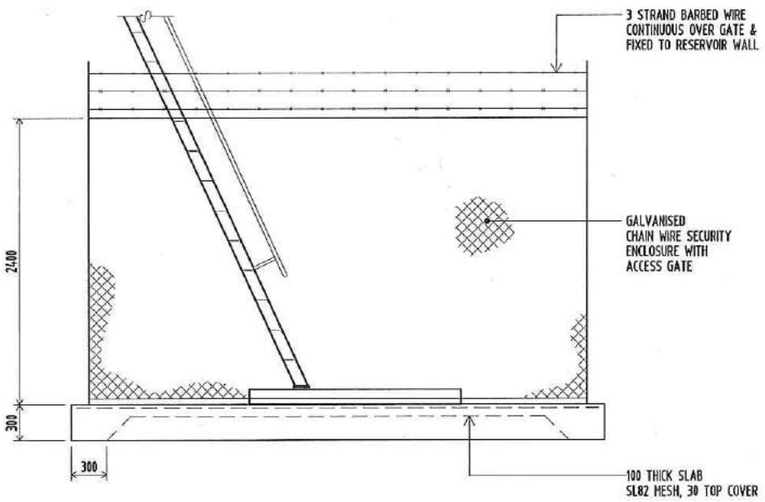

SECURITY ENCLOSURE ELEVATION

SCALE 1:25

SECURITY ENCLOSURE NOTES

1. CORNER POSTS TO BE O/150 (LIGHT) GALVANISED STEEL TUBE TO AS 1074.
2. ALL POSTS & CABLES ARE TO BE GALVANISED IN ACCORDANCE WITH AS 1650.
3. CABLES TO BE FORMED FROM TWO 3.15mm DIAMETER WIRES TWISTED TOGETHER AND INSTALLED IN ACCORDANCE WITH AS 1725.
4. GALVANISED STEEL END CAPS TO BE PROVIDED TO ALL POSTS.
5. ALL POSTS TO BE VERTICAL.
6. CHAIN WIRE TO BE FIXED USING 1.6 WIRE TIES AS FOLLOWS:-
   END POSTS AT 3 LOCATIONS.
   HORIZONTAL CABLE AT 375 CENTRES TO TOP CABLE.
   HORIZONTAL CABLE AT 600 CENTRES TO MIDDLE CABLE.
   HORIZONTAL CABLE AT 450 CENTRES TO BOTTOM CABLE.
7. BARBED WIRE TO AS 2423.

REFER DRAWING No. S-811 FOR STRUCTURAL NOTES.

T1	ISSUED FOR TENDER	C.J.F.	17.02.17
	Amendment	By	Date

glynntucker
consulting engineers

GLYNN TUCKER Pty Ltd
3/32 Balaclava Street
P.O. Box 8264, Woolloongabba 4102
t : 07 3839 1238
f : 07 3832 5573
e : brisbane@glynntucker.com.au
www.glynntucker.com.au
Also at Townsville
t : 07 4772 4722, f : 07 4721 1968

DOUGLAS SHIRE COUNCIL

Project
PORT DOUGLAS WATER STORAGE
AND TRUNK WATER SUPPLY
FOR
DOUGLAS SHIRE COUNCIL

Sheet Title LADDER BASE & ENCLOSURE DETAILS

Drawn	G.K.	
Date	MARCH 2013	
Scale	1:25	A1 SHEET
Checked	R.A.G.	
Approved	E.K. Munro	MIE Aust RPEQ 4953
Project No. 24021	Drg No. S-314	T1

PR126561_02/KMK/Port Douglas

Land Title Act 1994; Land Act 1994
Form 21 Version 3

SURVEY PLAN

Sheet 1 of 2

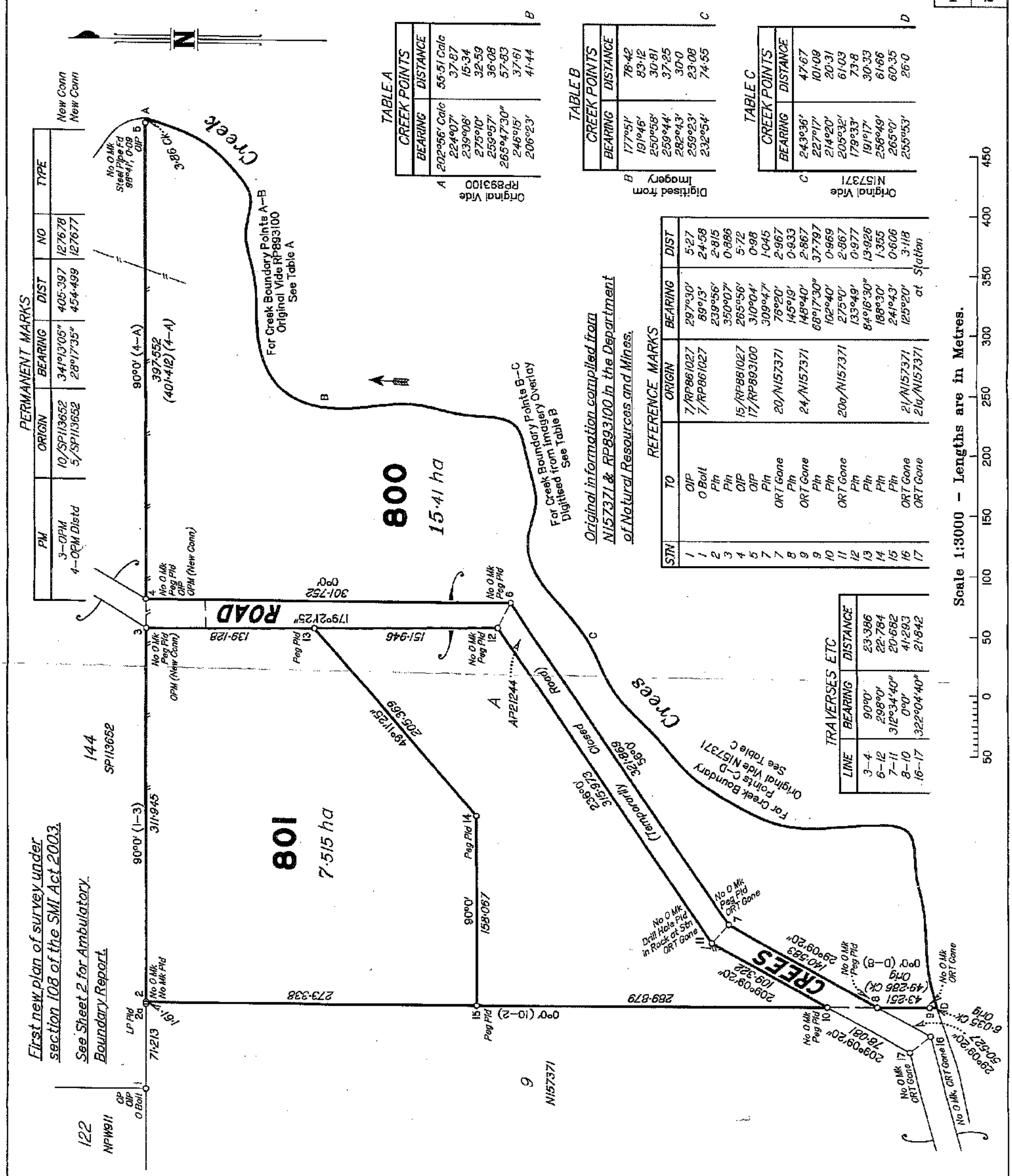

RPS Australia East Pty Ltd (ACN 140 292 762) hereby certify that the land comprised in this plan was surveyed by the corporation, by Matthew James WILLING, surveying associate and Daniel Geoffrey PINKHAM, surveying graduate, for whose work the corporation accepts responsibility, under the supervision of Stephen James REDGWELL, cadastral surveyor, and that the plan is accurate, that the said survey was performed in accordance with the Survey and Mapping Infrastructure Act 2003 and Surveyors Act 2003 and associated Regulations and Standards and that the said survey was completed on 30/04/2015.

S. Redgwell
Authorised Delegate

15.6.2015
Date

0 50 mm 100 mm 150 mm

State copyright reserved.

Plan of Lots 800 & 801

Cancelling Lot 8 on RP893100

LOCAL GOVERNMENT: DOUGLAS SHIRE LOCALITY: CRAIGLIE

Meridian: RP893100 Add 5°43'10" for MGA Zone 55 by GNSS observations

Survey Records: Yes

Scale: 1:3000

Format: STANDARD

SP279536