YOUR REF: 406-16 G. Nagle
OUR REF: MCUC 1981/2017 (D#819318)

27 June 2017

Greg Skyring Design & Drafting Pty Ltd (Tte)
11 Noli Close
MOSSMAN QLD 4873

Dear Sir

DECISION NOTICE UNDER S 335 SUSTAINABLE PLANNING ACT 2009: DEVELOPMENT APPLICATION FOR LOT 4 CAPE TRIBULATION ROAD CAPE TRIBULATION

With reference to the abovementioned Development Application, which was determined under Instrument of Delegation on 27 June 2017, please find attached the relevant Decision Notice.

The Notice includes extracts from the Act with respect to making representations about conditions, negotiated decisions, suspension of the appeal period, and lodging an Appeal.

Should you have any enquiries in relation to this Decision Notice, please contact Jenny Elphinstone of Development Assessment and Coordination on telephone number 07 4099 9482.

Yours faithfully

Paul Hoye
Manager Sustainable Communities

Att

DECISION NOTICE DETAILS
SUSTAINABLE PLANNING ACT 2009

APPLICANT DETAILS

Greg Skyring Design & Drafting Pty Ltd (Tte)
11 Noli Close
MOSSMAN QLD 4873

ADDRESS
Lot 4 Cape Tribulation Road, Cape Tribulation

REAL PROPERTY DESCRIPTION
Lot 4 on RP740257

PROPOSAL
Material Change of Use for a House

DECISION
Approved subject to conditions (refer to approval package below).

DECISION DATE
27 June 2017

TYPE
Material Change of Use for a House (Development Permit)

REFERRAL AGENCIES
None Applicable.

SUBMISSIONS
There were no submissions for this application.

FURTHER DEVELOPMENT PERMITS REQUIRED
Development Permit for Building Works.

CODES TO COMPLY WITH FOR SELF-ASSESSABLE DEVELOPMENT
None.

DOES THE ASSESSMENT MANAGER CONSIDER THE APPLICATION TO BE IN CONFLICT WITH APPLICABLE CODES, PLANNING SCHEME, STATE PLANNING POLICIES OR PRIORITY INFRASTRUCTURE PLAN (IF YES, INCLUDE STATEMENT OF REASONS)
Not in conflict

APPROVED DRAWING(S) AND / OR DOCUMENT(S)
The term 'approved drawing(s) and / or document(s)' or other similar expressions means:

Drawing or Document	Reference	Date
Floor Plan	Home-Fab, Mareeba Design 1820, W2 of 12	April 2001
Elevations	Home-Fab, Mareeba Design 1820, W9 & W10 of 12	April 2001
Site Plan and Additional Bungalows	Greg Skyring Design and Drafting Pty Ltd Plan 406-16, 1 of 2, Preliminary Issue	31 May 2017
Elevations	Greg Skyring Design and Drafting Pty Ltd Plan 406-16, 2 of 2, Preliminary Issue	31 May 2017

ASSESSMENT MANAGER CONDITIONS

1. Carry out the approved development generally in accordance with the approved drawing(s) and/or document(s), and in accordance with:

   a. The specifications, facts and circumstances as set out in the application submitted to Council, including recommendations and findings confirmed within technical reports; and

   b. The following conditions of approval and the requirements of Council's Planning Scheme and the *FNQROC Development Manual*.

   Except where modified by these conditions of approval.

Timing of Effect

2. The conditions of the Development Permit must be satisfied prior to Commencement of Use, except where specified otherwise in these conditions of approval.

Lawful Point of Discharge

3. The flow of all external stormwater from the property must be directed to a lawful point of discharge such that it does not adversely affect surrounding properties or properties downstream from the development.

Damage to Council Infrastructure

4. In the event that any part of Council's existing road infrastructure is damaged as a result of construction activities occurring on the site, including, but not limited to, mobilisation of heavy construction equipment, stripping and grubbing, the applicant/owner must notify Council immediately of the affected infrastructure and have it repaired or replaced at the developer's/owner's/builder's cost, prior to the Commencement of Use.

Vehicle Crossing

5. Both vehicle crossings from Cape Tribulation Road must be as per FNQROC Development Manual Standard Drawing S1105 (Rural Allotment Access).

Driveways

6. Driveways for the House located on the southern part of the land and the bedrooms located on the northern part of the land the Applicant must:

   a. Be constructed to a minimum gravel standard of 75mm road base on a compacted soil surface;

   b. Have a minimum trafficable (cleared and formed) width of four (4) metres capable of accommodating a 15 tonne vehicle;

   c. Be no wider than 6 metres;

   d. Must include sufficient turning area at the end of the driveway for a fire emergency service vehicle in accordance with the Queensland Fire and Emergency Services Fire Hydrant and Vehicle Access Guidelines; and

   e. Are to commence from the property boundary to the proposed house and bedrooms.

Fencing of Private Yard Areas

7. Where fencing is proposed to the land this must be contained to the curtilage of the buildings with a self-closing gate. Other areas of the site are to remain unfenced to allow the free movement of fauna, unless otherwise approved by the Chief Executive Officer.

Power Supply

8. An environmentally acceptable and energy efficient power supply is constructed, installed and connected prior to occupation and sited so as to be screened from the road.

Noise Emissions

9. Noise from; generators, air-conditioning units, service equipment or other mechanical equipment, must not emanate from the subject land to a degree that would, in the opinion of the Chief Executive Officer, create an environmental nuisance having regard to the provisions of Chapter 8 Part 3B of the *Environmental Protection Act 1994.*

   The noise of generators is controlled by design, or the generator is enclosed within a sound insulated building with a residential approved muffler. The noise level generated is to be less than 65 dBA when measured from a distance of 7 metres.

Fuel Storage

10. All fuels must be stored in an undercover and secure location at all times. Any fuel storage associated with an on-site generator, with 20 litres or more of fuel, is enclosed with a building and provided with a bund.

External lighting

11. External lighting is to be kept to the minimum necessary for orientation, safety and security. Flood lights must not point up, and areas of retained vegetation should, in general, not be illuminated. Where appropriate outdoor lights are controlled by movement detectors and/or timers.

Vegetation Clearing

12. Existing vegetation on the land must be retained in all areas except those affected by the construction of access driveways and/or the installation of services as detailed on the approved plans. Any further clearing requires a Permit for Operational Works.

Creek Crossing

13. Work associated with the creek pedestrian crossing and bridge is not to disturb or damage tree roots. All exposed surfaces must incorporate erosion and sediment controls during construction and must be maintained until revegetation, or other permanent stabilisation, has occurred.

Landscaping

14. All landscaping to be installed must consist of native and endemic species and must be planted in an irregular and random fashion to blend with existing vegetation. Exotic species are not permitted. With the exception of a 4m wide access driveways a buffer of at least 10 metres width must be provided to Cape Tribulation Road. A vegetation buffer of a minimum of 5 metres width must be maintained to the side boundaries. The landscape buffer to the road must be planted within two (2) years of the date of this approval.

Water Supply

15. Water storage tank(s) with a minimum capacity not less than 5,000 litres must be installed for the House and also for the bedrooms on the northern part of the land prior to occupation of these bedrooms premises. Details of the water tank(s) must be shown on plans submitted with the Building Application. Such water tank(s) must be provided with:

    a. Mosquito-proof screens of brass, copper, aluminium or stainless steel gauze not coarser than one (1) mm aperture mesh of substantial construction and installed in such manner as not to cause or accelerate corrosion; or

    b. Flap valve at every opening of the tank or other receptacle; or

    c. Other approved means for preventing the ingress or egress of mosquitoes; and

d. installed and connected prior to occupation;

e. Where a tank or other receptacle is provided with a manhole, the manhole must have a diameter of no more than 40cm; and

f. A 50mm ball valve with a camlock fitting.

Effluent Disposal system

16. The method of any on-site effluent disposal must be in accordance with the relevant code at the time of development. Any area of clearing necessary for an onsite wastewater treatment must be approved by the Chief Executive Officer prior to the commencement of any such activity.

Building Colours

17. The exterior finishes and colours of all development (including water tanks) are non-reflective and consist of colours that blend easily with surrounding native vegetation and view-shed.

The above requirements must be made known in writing to all prospective purchasers.

Sediment and Erosion Control

18. Soil and water management measures must be installed/implemented prior to discharge of water from the site, such that no external stormwater flow from the site adversely affects surrounding or downstream properties (in accordance with the requirements of the *Environmental Protection Act* 1994, and the *FNQROC Development Manual)*.

ADVICE

1. This approval, granted under the provisions of the *Sustainable Planning Act* 2009*,* shall lapse four (4) years from the day the approval takes effect in accordance with the provisions of the *Sustainable Planning Act* 2009*.*

2. The applicant/owner is advised that this approval does not approve the construction of the building work. A Development Permit for Building Work must be obtained in order for construction to commence on the separate bedrooms. A Development Permit for Building work is required for the existing House. A plumbing approval is required for the fittings in the proposed buildings and the onsite waste water treatment infrastructure.

3. All building site managers must take all action necessary to ensure building materials and / or machinery on construction sites are secured immediately following the first cyclone watch and that relevant emergency telephone contacts are provided to Council officers, prior to commencement of works.

4. This approval does not negate the requirement for compliance with all other relevant Local Laws and other statutory requirements.

5. For information relating to the *Sustainable Planning Act* 2009 log on to www.dilgp.qld.gov.au . To access the *FNQROC Development Manual*, Local Laws and other applicable Policies log on to www.douglas.qld.gov.au .

LAND USE DEFINITIONS

In accordance with the Douglas Shire Planning Scheme 2006, the approved land use of House that is defined as:

Means the use of premises comprising one Dwelling Unit, located on one lot for the exclusive residential use of one Household. The use includes:

- Outbuildings/structures incidental to and necessarily associated with the residential use;
- the care of children in accordance with the Child Care (Family Day Care) Regulation 1991;
- accommodation for a member or members of the extended family of the Household occupying the House and for personal staff;
- a display house which displays to the general public the type of construction or design offered by a builder/developer, for a maximum period of twelve (12) months and which then converts to a House for the exclusive use of one Household; and
- The short term letting of a house for the purpose of holiday rental accommodation.

***This definition is provided for convenience only. This Development Permit is limited to the specifications, facts and circumstances as set out in the application submitted to Council and is subject to the abovementioned conditions of approval and the requirements of Council's Planning Scheme and the *FNQROC Development Manual*.**

RIGHTS OF APPEAL
Attached

End of Decision Notice

APPENDIX 1: APPROVED PLAN(S) & DOCUMENT(S)

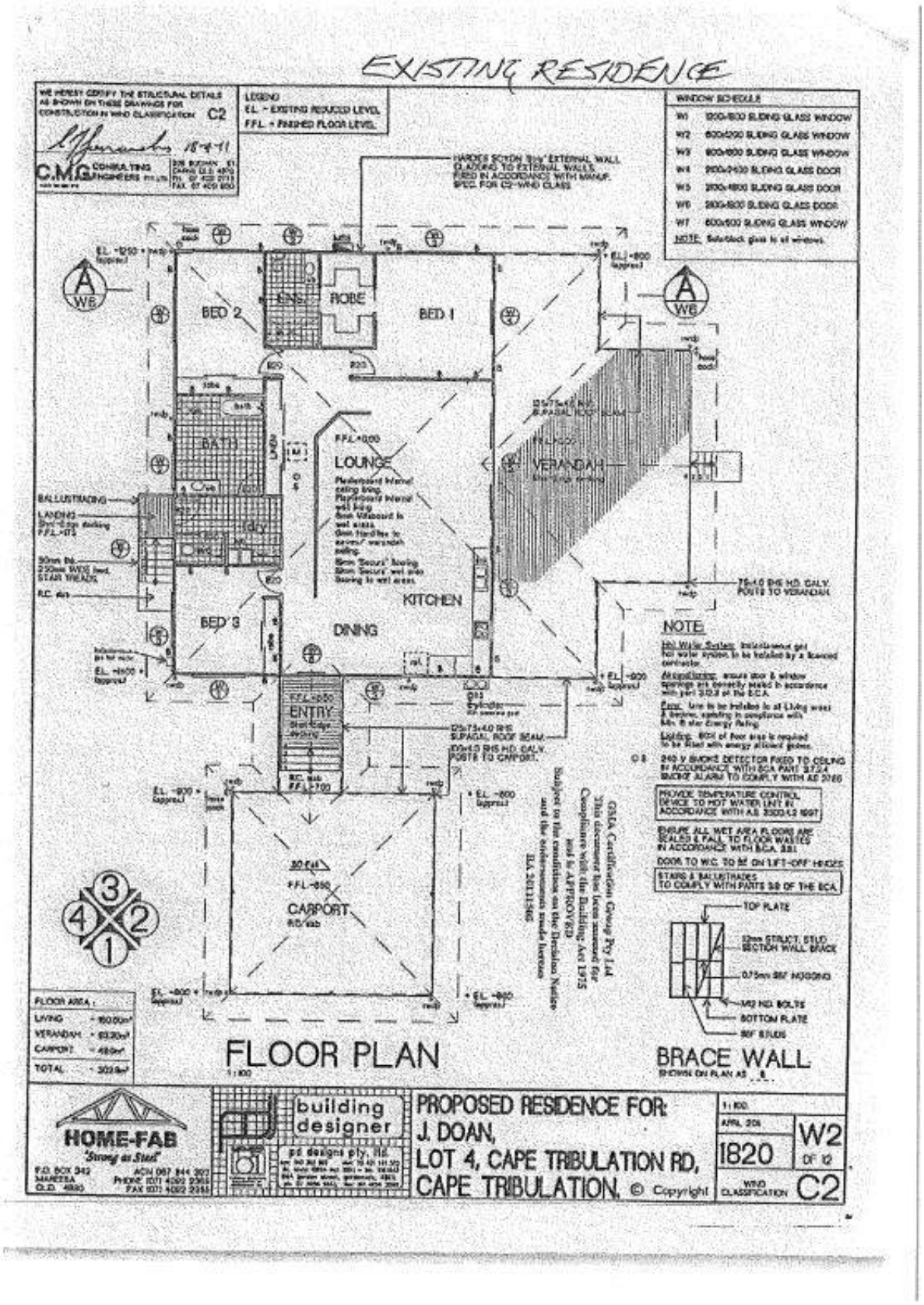

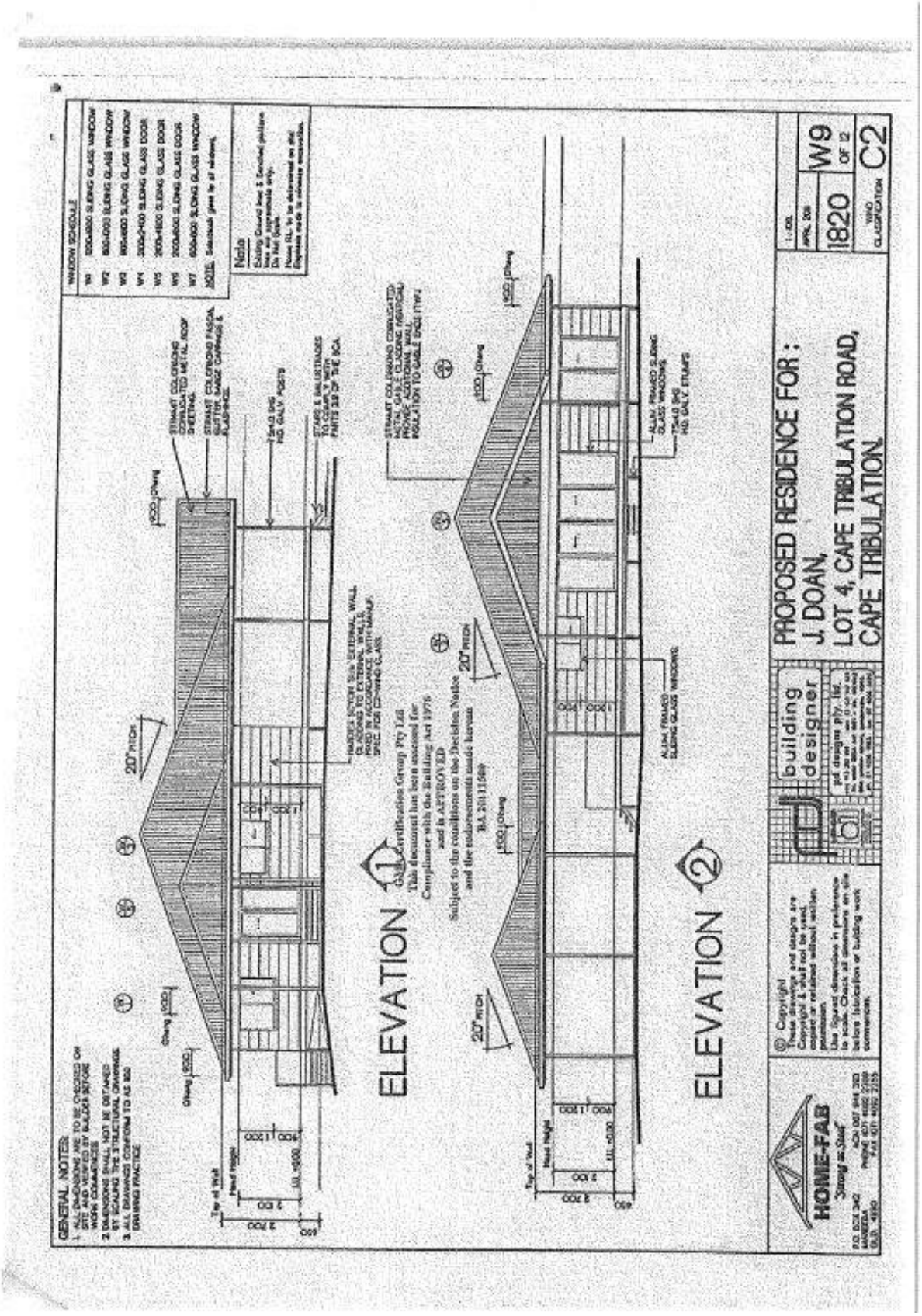
GENERAL NOTES
WINDOW SCHEDULE
Note
ELEVATION 1
ELEVATION 2
20° PITCH
building designer
HOME-FAB
PROPOSED RESIDENCE FOR:
J. DOAN,
LOT 4, CAPE TRIBULATION ROAD,
CAPE TRIBULATION.
1820
W9
OF 12
C2

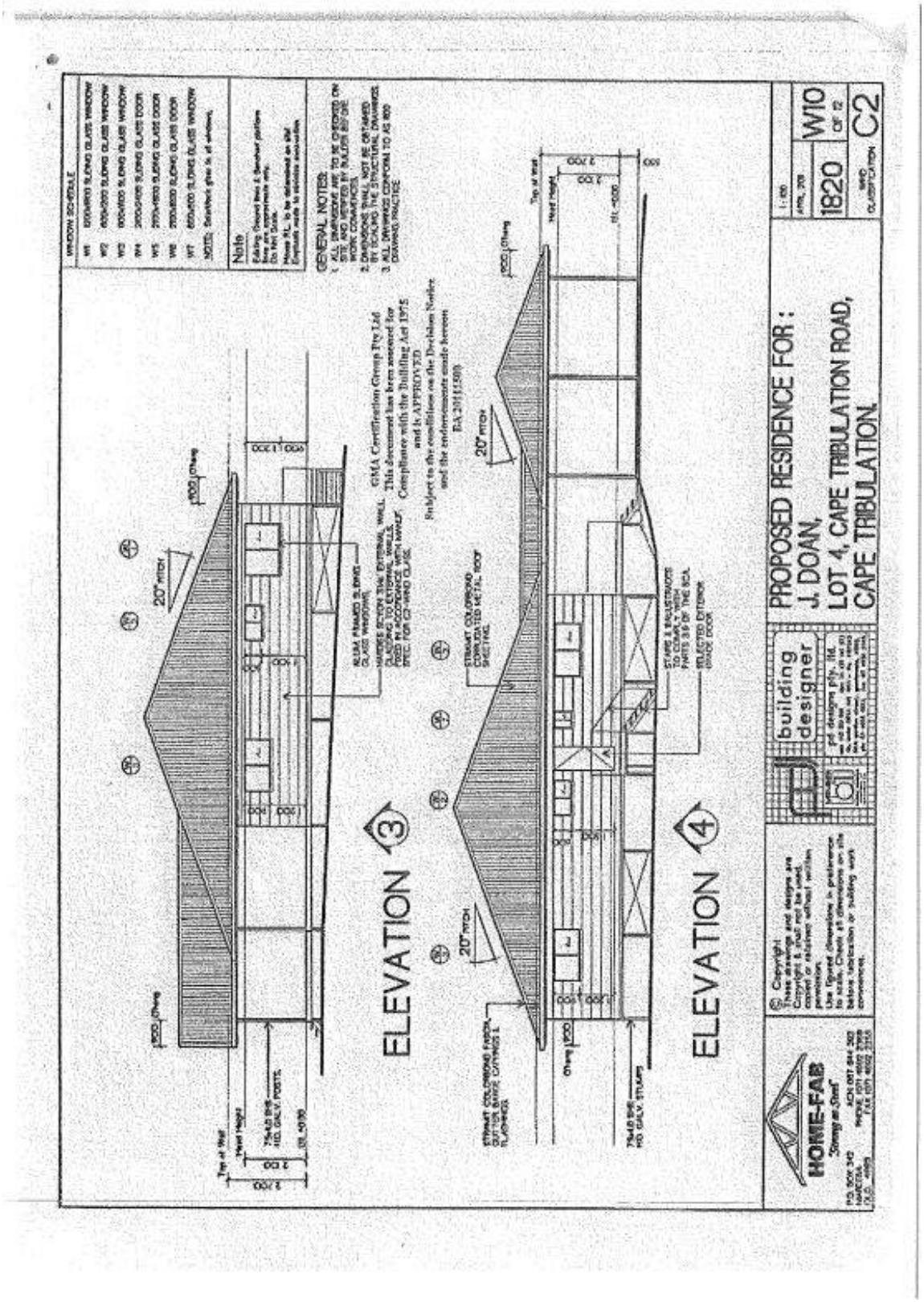
WINDOW SCHEDULE
W1 1200x1800 SLIDING GLASS WINDOW
W2 1800x1800 SLIDING GLASS WINDOW
W3 1800x1800 SLIDING GLASS WINDOW
W4 2200x2400 SLIDING GLASS DOOR
W5 2700x1800 SLIDING GLASS DOOR
W6 2700x2400 SLIDING GLASS DOOR
W7 1800x1800 SLIDING GLASS WINDOW
NOTE: Substitute glass to all windows.
Note
GENERAL NOTES:
1. ALL DIMENSIONS ARE TO BE CHECKED ON SITE AND VERIFIED BY BUILDER BEFORE WORK COMMENCES.
2. DIMENSIONS SHALL NOT BE OBTAINED BY SCALING THE STRUCTURAL DRAWINGS.
3. ALL DRAWINGS CONFORM TO AS 800 DOMAIN PRACTICE
CMA Certification Group Pty Ltd
This Document has been assessed for Compliance with the Building Act 1975 and is APPROVED
Subject to the conditions on the Decision Notice and the endorsements made hereon
BA 201(1500)
20° PITCH
ELEVATION 3
ELEVATION 4
building designer
PROPOSED RESIDENCE FOR :
J. DOAN,
LOT 4, CAPE TRIBULATION ROAD,
CAPE TRIBULATION.
1:100
1820
W10
OF 12
C2
HOME-FAB
"Strong as Steel"

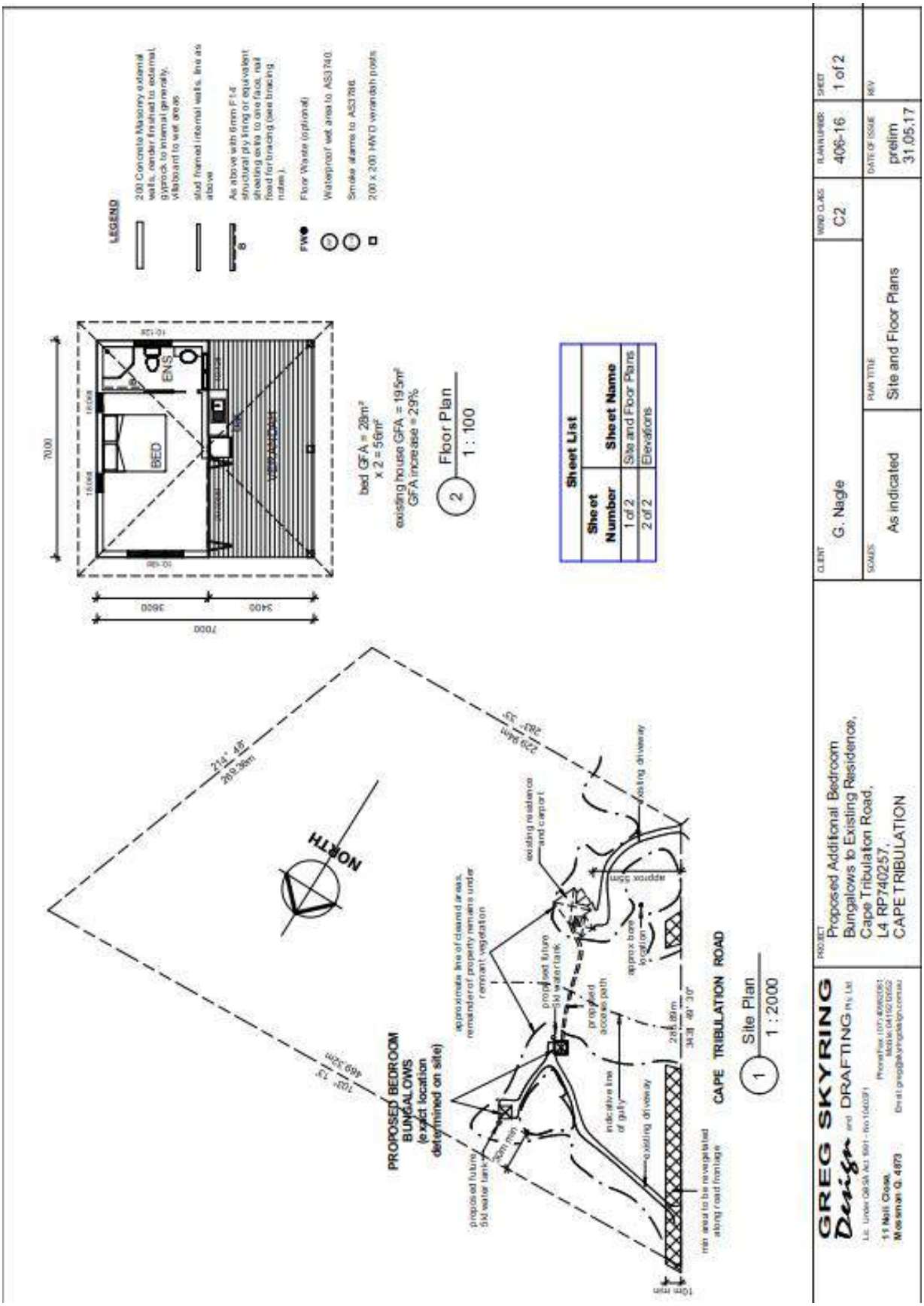
LEGEND
200 Concrete Masonry external walls, render finished to external, gyprock to internal generally, villaboard to wet areas
stud framed internal walls, line as above
As above with 6mm F.C. structural ply lining or equivalent sheeting extra to one face, nail fixed for bracing (see bracing notes).
FW Floor Waste (optional)
Waterproof wet area to AS3740
Smoke alarms to AS3786
200 x 200 HWD verandah posts
BED
ENS
VERANDAH
7000
3400
3600
bed GFA = 28m²
x 2 = 56m²
existing house GFA = 195m²
GFA increase = 29%
2 Floor Plan
1 : 100
Sheet List
Sheet Number
Sheet Name
1 of 2
Site and Floor Plans
2 of 2
Elevations
NORTH
PROPOSED BEDROOM BUNGALOWS (exact location determined on site)
approximate line of cleared areas, remainder of property remains under remnant vegetation
existing residence and carport
proposed future 5kl water tank
proposed access path
approx bore location
existing driveway
approx 5.0m
indicative line of gully
existing driveway
proposed future 5kl water tank
min area to be revegetated along road frontage
CAPE TRIBULATION ROAD
1 Site Plan
1 : 2000
CLIENT
G. Nagle
SCALES
As indicated
PLAN TITLE
Site and Floor Plans
WIND CLASS
C2
PLAN NUMBER
406-16
SHEET
1 of 2
DATE OF ISSUE
prelim 31.05.17
REV
PROJECT
Proposed Additional Bedroom Bungalows to Existing Residence, Cape Tribulation Road, L4 RP740257, CAPE TRIBULATION
GREG SKYRING Design and DRAFTING Pty Ltd
Lic. Under QBSA Act 1991 - No 1040391
11 Neil Close, Mossman Q. 4873
Phone/Fax (07) 40662061
Mobile 0419270502
Email gregs@skyringdesign.com.au

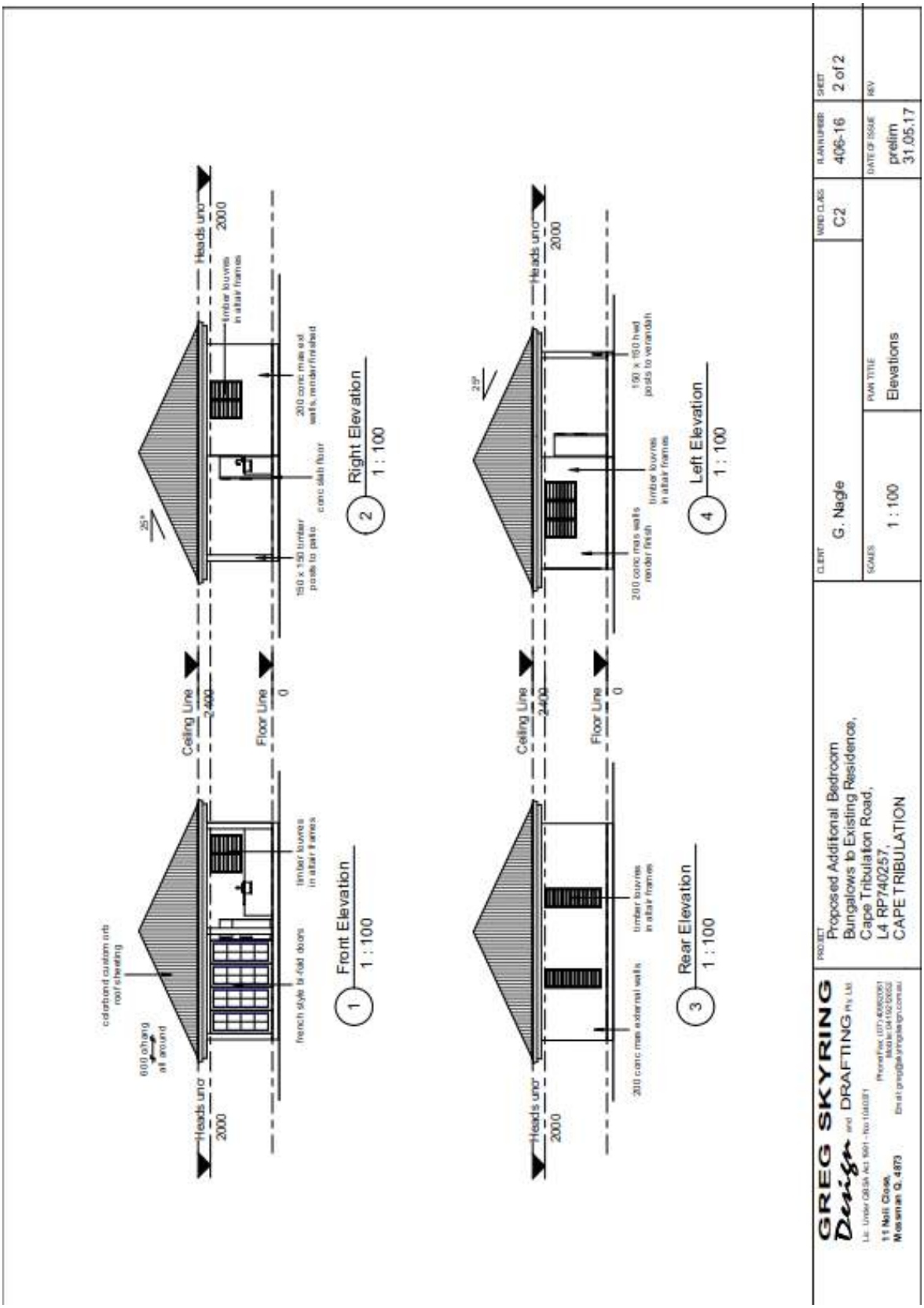
colorbond custom orb roof sheeting
600 ohang all around
Heads uno 2000
Ceiling Line 2400
Floor Line 0
25°
timber louvres in alfair frames
french style bi-fold doors
1 Front Elevation 1 : 100
timber louvres in alfair frames
200 conc mas ext walls, render finished
conc slab floor
150 x 150 timber posts to patio
2 Right Elevation 1 : 100
timber louvres in alfair frames
200 conc mas external walls
3 Rear Elevation 1 : 100
timber louvres in alfair frames
200 conc mas walls render finish
150 x 150 hwd posts to veranda
4 Left Elevation 1 : 100
GREG SKYRING Design and DRAFTING Pty Ltd
Lic. Under QBSA Act 1991 - No 1040371
11 Neill Close, Mossman Q. 4873
Phone/Fax (07) 40620061
Mobile 0419210662
Email greg@skyringdesign.com.au
PROJECT
Proposed Additional Bedroom Bungalows to Existing Residence, Cape Tribulation Road, L4 RP740257, CAPE TRIBULATION
CLIENT
G. Nagle
SCALES
1 : 100
PLAN TITLE
Elevations
VOID CLASS
C2
PLAN NUMBER
406-16
SHEET
2 of 2
DATE OF ISSUE
prelim 31.05.17
REV
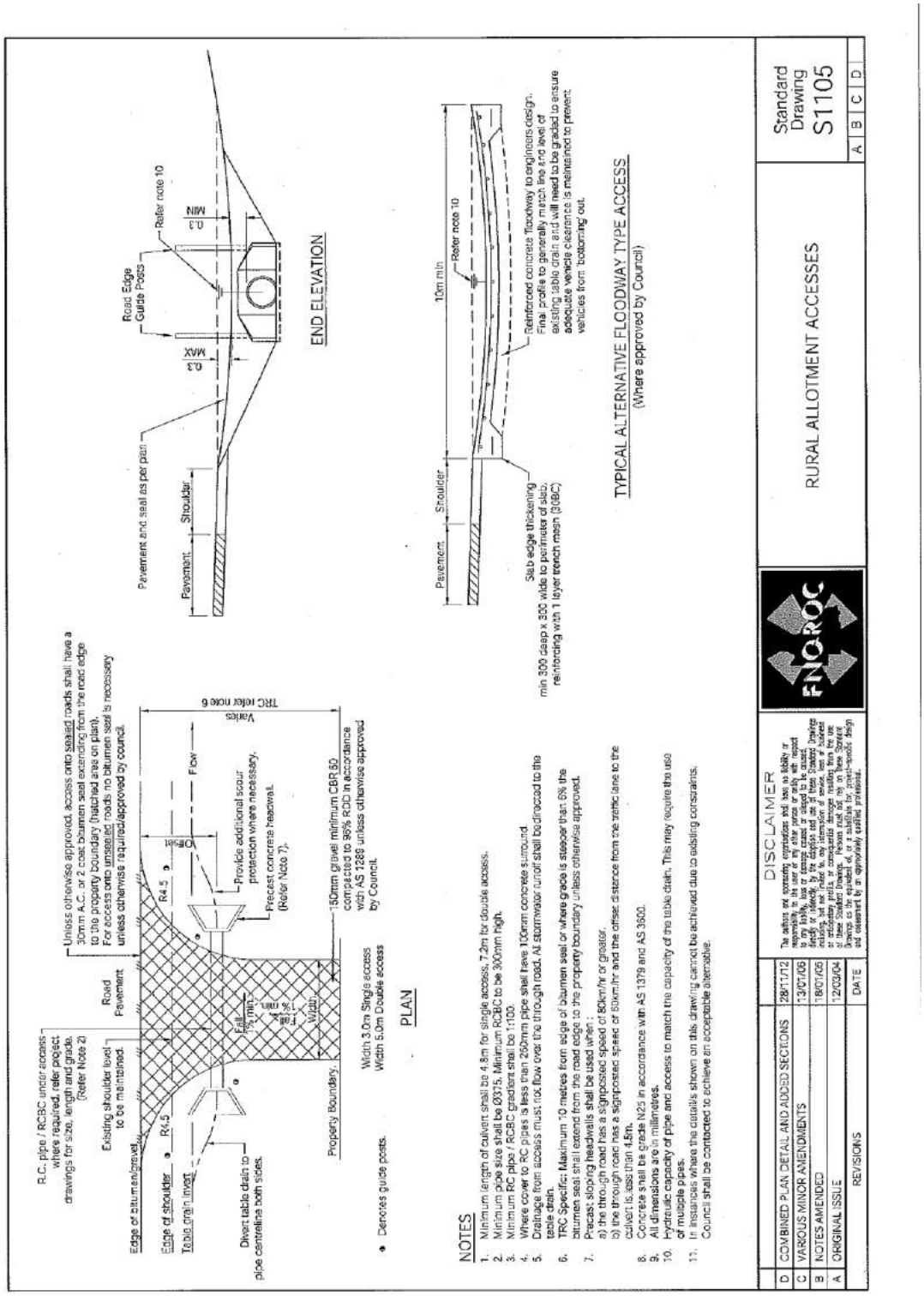
APPENDIX 2 – STANDARD RURAL ALLOTMENT ACCESS